CEE 536
Project Planning Scheduling and Control

EXAMPLE PROBLEMS



Photios G. Ioannou, Ph.D., Dipl.Eng., F.ASCE
Professor of Civil and Environmental Engineering

Chachrist Srisuwanrat, Ph.D.
Former Graduate Student Instructor

University of Michigan
Ann Arbor, Michigan 48109-2125

TABLE OF CONTENTS

1. NETWORK CONSTRUCTION ---------- 3
   - ACTIVITY ON ARROW 3
   - ACTIVITY ON NODE..... 3
2. ACTIVITY-ON-ARROW SCHEDULING ----------13
   - EVENT APPROACH 13
   - MISSING FLOATS 13
3. ACTIVITY-ON-NODE SCHEDULING ----------32
4. SCHEDULING USING A LINK MATRIX ----------47
5. PROJECT UPDATING ----------53
6. PERT—PNET ----------55
7. TIME-COST TRADEOFF TABLES----------68
8. TIME-COST TRADEOFF-LP ----------95
9. RESOUCE LEVELING ----------115
   - MINIMUM MOMENT METHOD 115
10. RESOUCE LEVELING ----------156
   - PACK..... 156
11. OVERLAPPING NETWORKS----------182
12. REPETITIVE SCHEDULING METHOD----------193

1. NETWORK CONSTRUCTION

- ACTIVITY ON ARROW
- ACTIVITY ON NODE

Problem 1.1

a) Construct an activity on arrow network based on the activity descriptions below. Show all your work. Label activities in the network by their activity letters and node numbers. Remove any redundant dependencies and label dummy activities DUMMY1, DUMMY2, etc.

b) Construct a precedence network based on the same activity descriptions below. Show all your work. Label activities in the network by their activity letters and node numbers. Remove all redundant dependencies and arrange activities in proper sequence steps.

- Activities H, R2, T1 start the project.
- Activity T2 can start when Activities H, E1 and S are completed.
- Activity E1 also depends on Activity R2.
- Activity X follows Activity H and precedes Activity L.
- Activity E is preceded by Activities T2 and P1.
- The predecessors to Activity G are Activities L, T2 and P1.
- The successors to Activity T1 are Activities E1, S, W and D2.
- Activity P1 cannot begin until Activity W is finished.
- Activity P2 and F follow Activities W and D2, and precede Activities E and R1.
- Activity O2 depends on T2 and P1, and precedes Activity L.

Problem 1.2

a) Construct an activity on arrow network based on the activity descriptions below. Show all your work. Label activities in the network by their activity letters and node numbers. Remove any redundant dependencies and label dummy activities DUMMY1, DUMMY2, etc.

b) Construct a precedence network based on the same activity descriptions below. Show all your work. Label activities in the network by their activity letters and node numbers. Remove all redundant dependencies and arrange activities in proper sequence steps.

- Activity I follows Activity B and precedes Activity Q.
- Activity B1 precedes Activity P and follows the completion of Activities Q, K2, and E.
- Activity R follows the completion of Activity B.
- Activity S2 follows Activities R and S1, and precedes Activity P.
- Activity K3 is preceded by Activities X, L, and Z, and followed by Activities G and F.
- Activity E2 precedes Activities A1, X, L, and Z.
- Activity B can start when Activities A1 and X are completed.
- The predecessors to Activity S1 are Activities E, G, and F.
- Activity E depends on Activity L and E2 and precedes Activities N2, S1, and K2.
- Activity K2 follows Activities N2, R, and L.
- Activity P depends on Activities R and N2.
- Activity S2 depends on Activities X, F, and E2.

Problem 1.3

a) Construct an activity on arrow network based on the activity descriptions below. Show all your work. Label activities in the network by their activity letters and node numbers. Remove any redundant dependencies and label dummy activities DUMMY1, DUMMY2, etc.

b) Construct a precedence network based on the same activity descriptions below. Show all your work. Label activities in the network by their activity letters and node numbers. Remove all redundant dependencies and arrange activities in proper sequence steps.

The predecessors to Activity Z2 are Activities L, C and R.
The successors to Activity B are Activities E1, S, W and D2.
Activity E1 also depends on Activity M.
Activity U and F follow Activities W and D2, and precede Activities E and R1.
Activity Y follows Activities C and R, and followed by Activity L.
Activities D, M, and B start the project.
Activity C can start when Activities D, E1 and S are completed.
Activity R cannot begin until Activity W is finished.
Activity I follows Activity D and precedes Activity L.
Activity E follows Activities C and R.

Solution 1.1.a

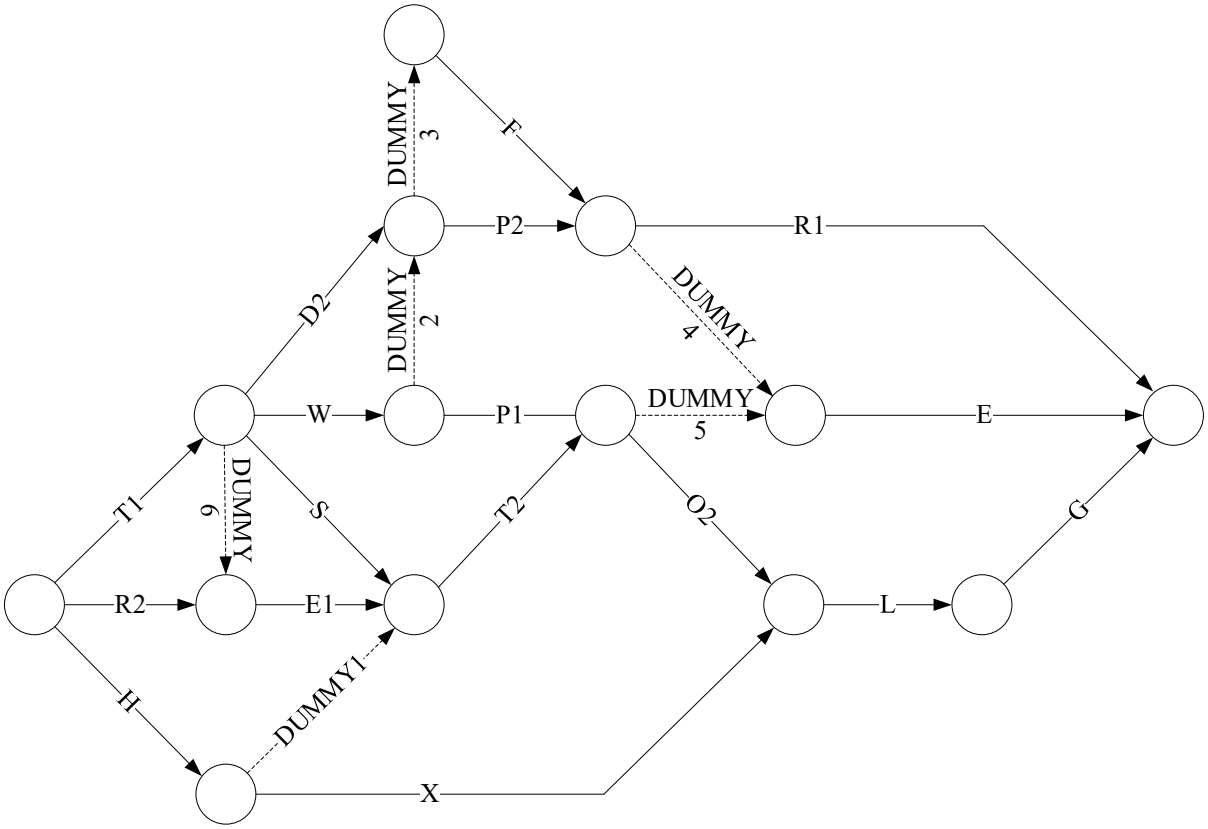

Solution 1.1.b

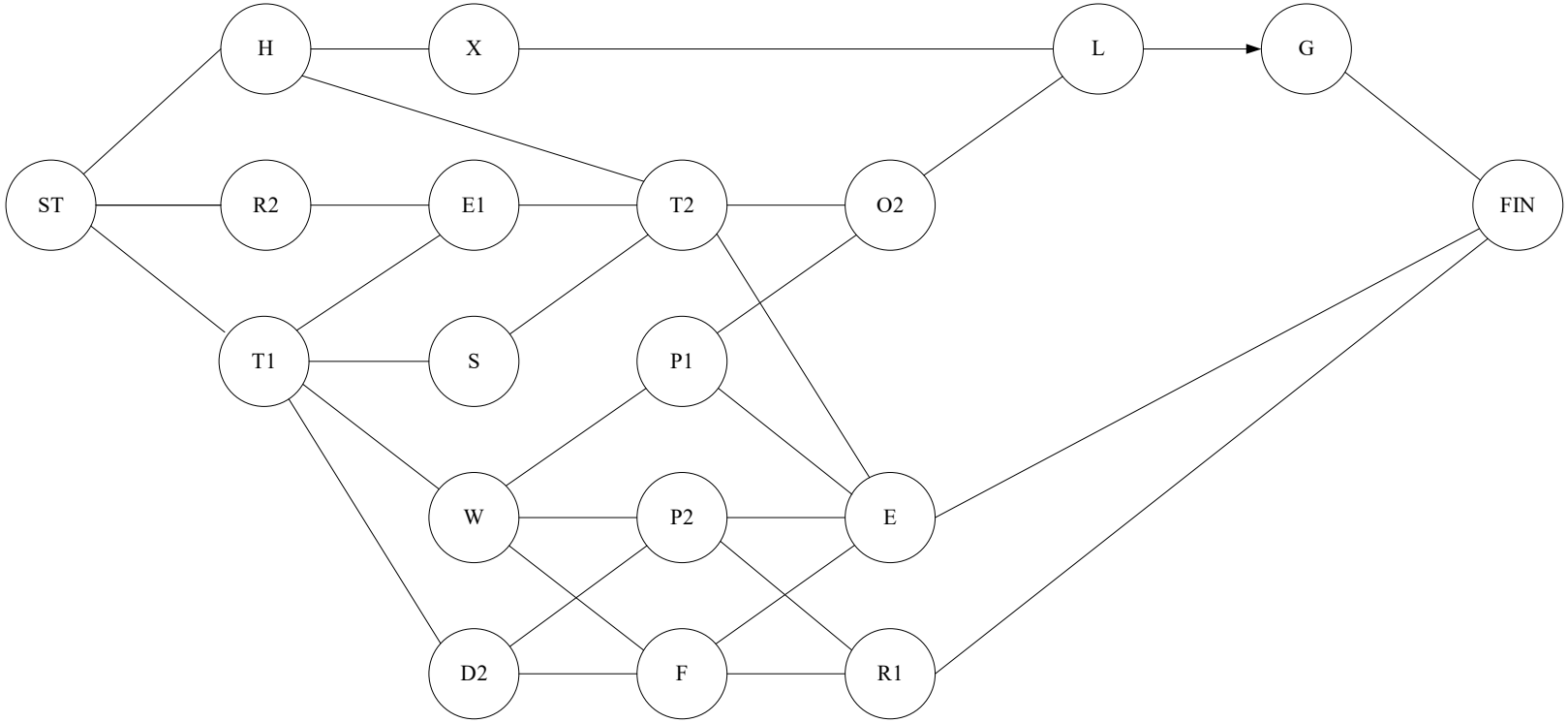

Solution 1.2.a

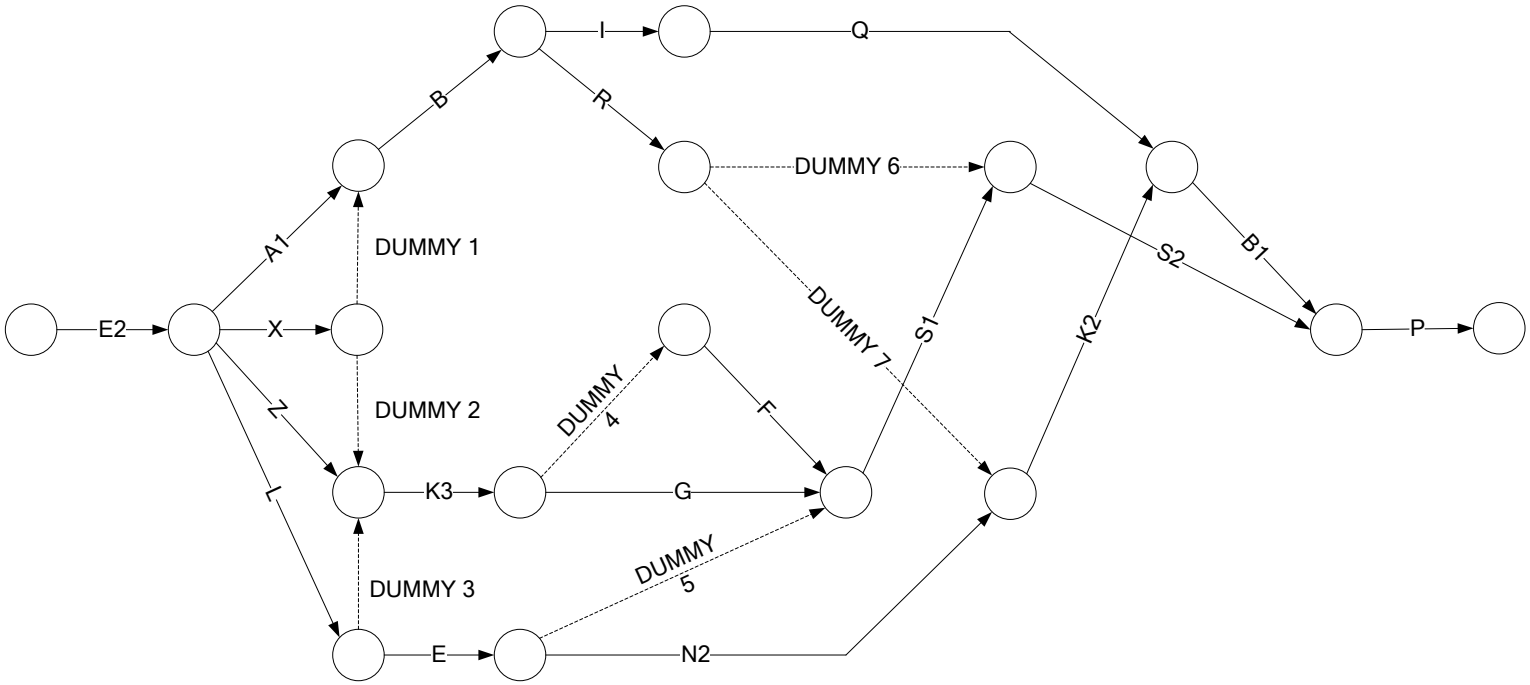

Solution 1.2.b

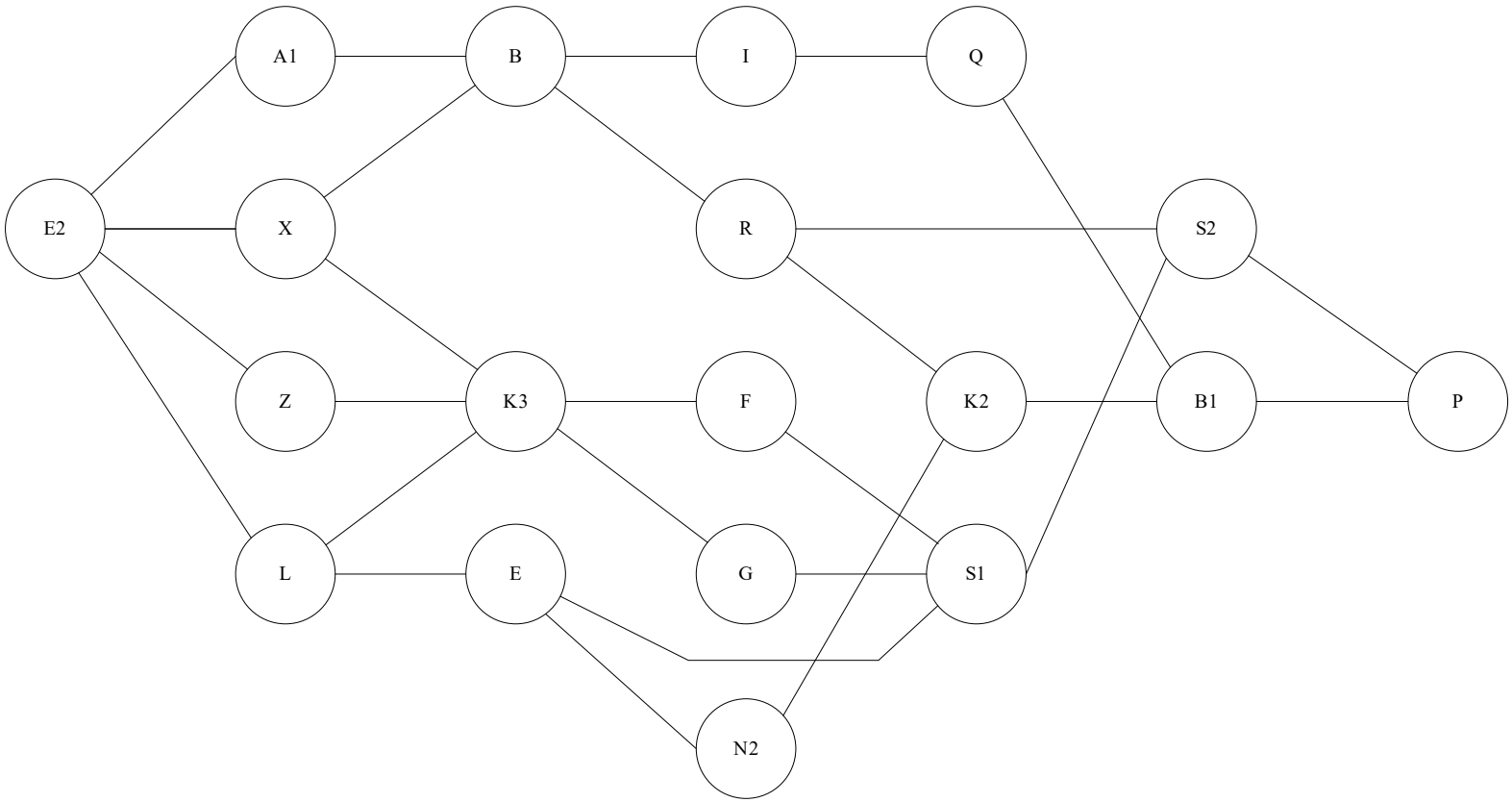

Solution 1.3.a

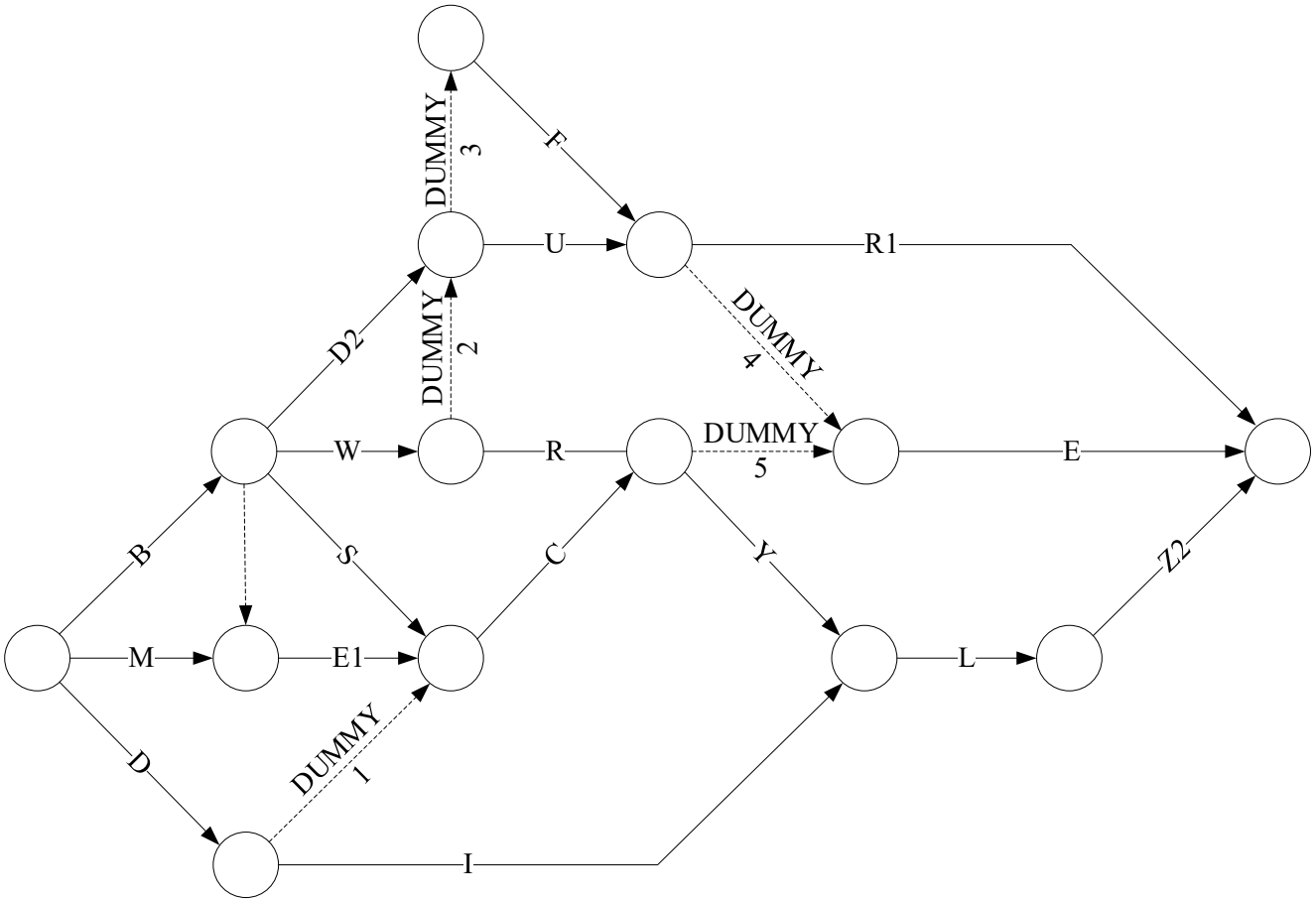

Solution 1.3.b

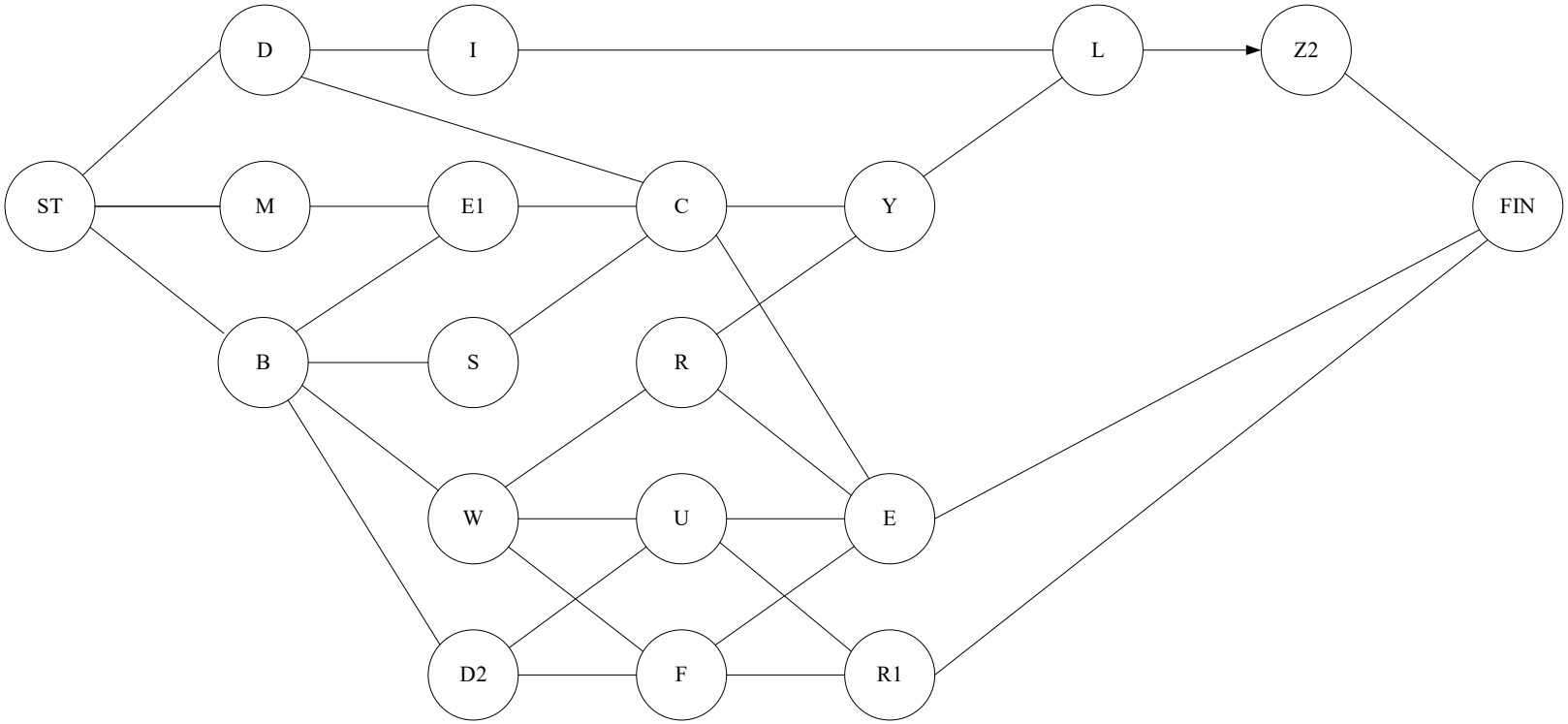

2. ACTIVITY-ON-ARROW SCHEDULING

- EVENT APPROACH
- MISSING FLOATS

Calculation for activity-on-arrow networks

1) Calculate TE, Time Early
TEj = max(TEi + DUR)

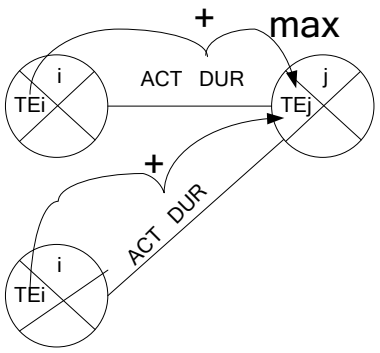

2) Calculate TL, Time Late
TLi = min(TLj - DUR)

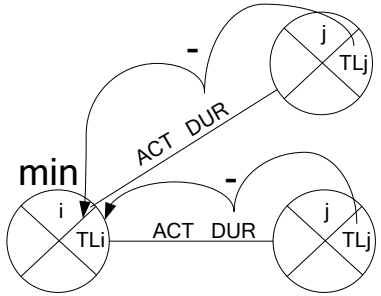

3) Calculate TF, Total Float
TFij = TLj-DUR-TEi

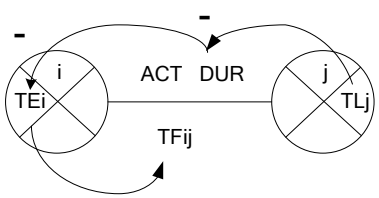

4) Calculate FF, Free Float
FFij = TEj-DUR-TEi

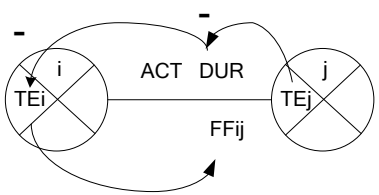

5) Calculate INTF, Interfering Float
INFij = TFij - FFij or TLj - TEj

6) Calculate INDF, Independent Float
INDFij = TEj-DUR-TLi

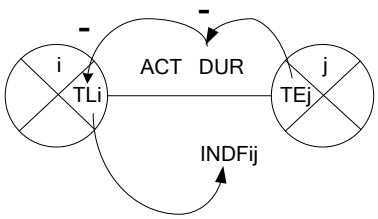

Note:
TF => FF>= INDF and TF >= INTF.
If TF = 0 then all the floats = 0.
If FF = 0 then INDF = 0. Remember that INDF is a part of FF.

Problem 2.1 Calculate the schedule dates (TE and TL) and the four floats (TF, FF, INTF, and INDF).

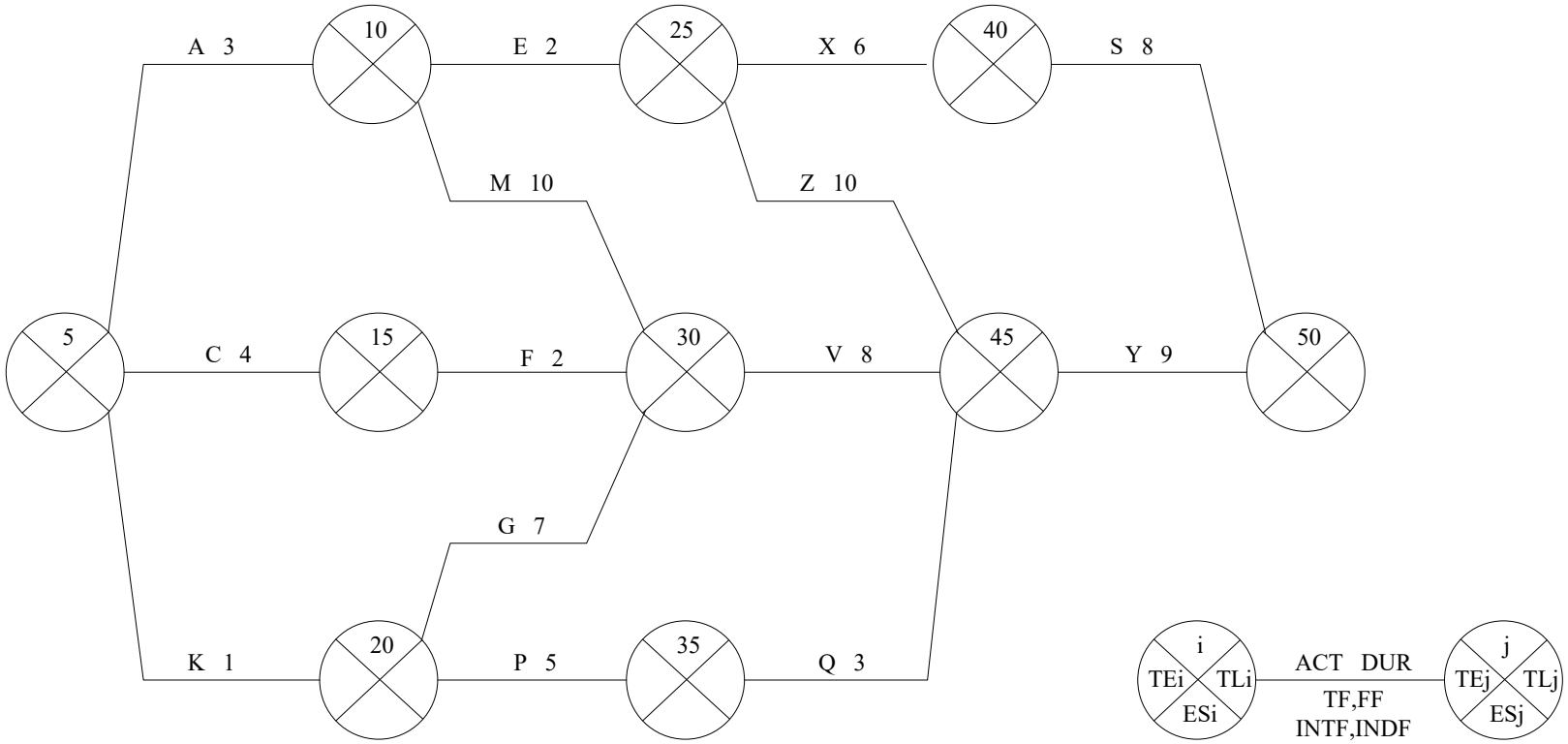

Problem 2.2 Calculate the schedule dates (TE and TL) and the four floats (TF, FF, INTF, and INDF).

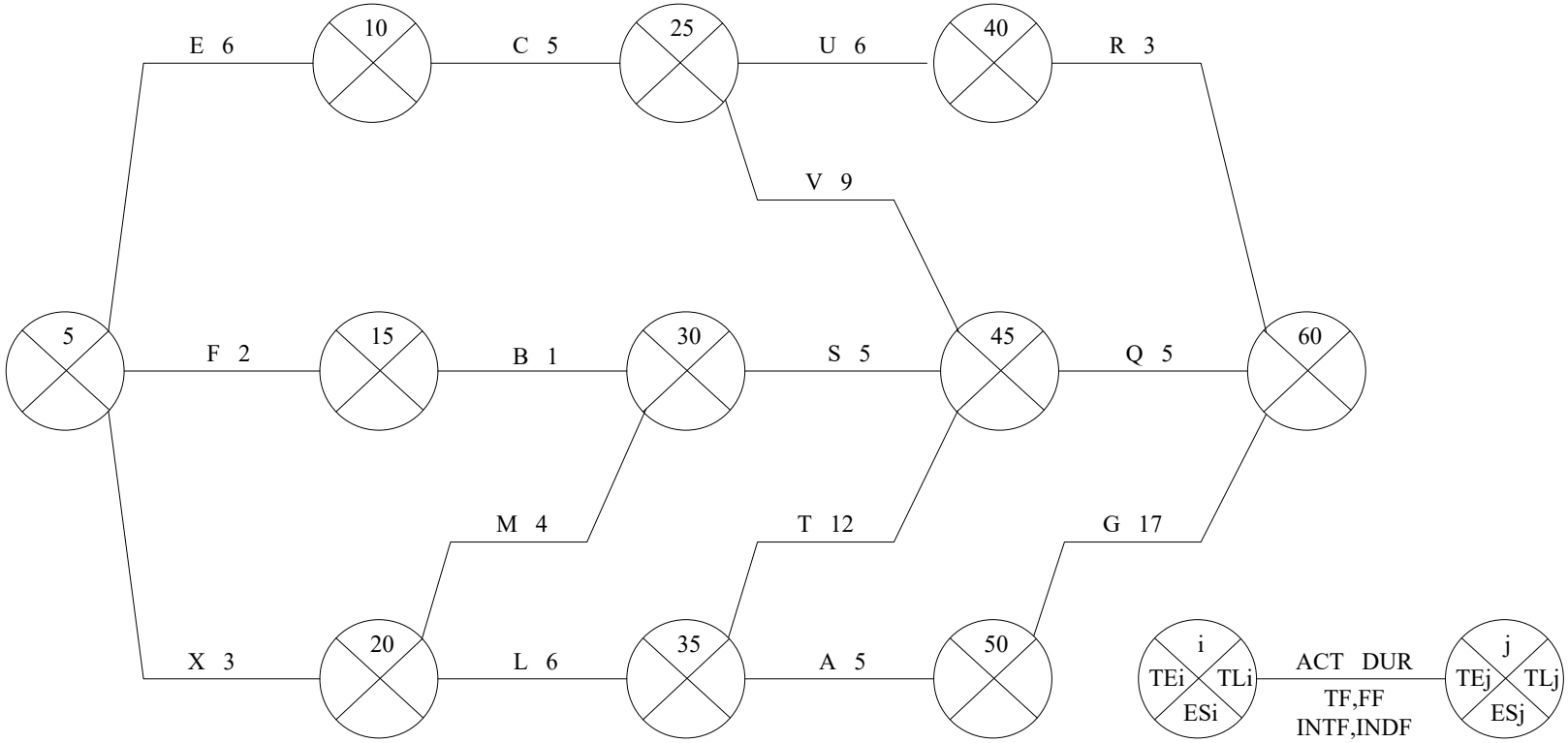

Problem 2.3 Calculate the schedule dates (TE and TL) and the four floats (TF, FF, INTF, and INDF).

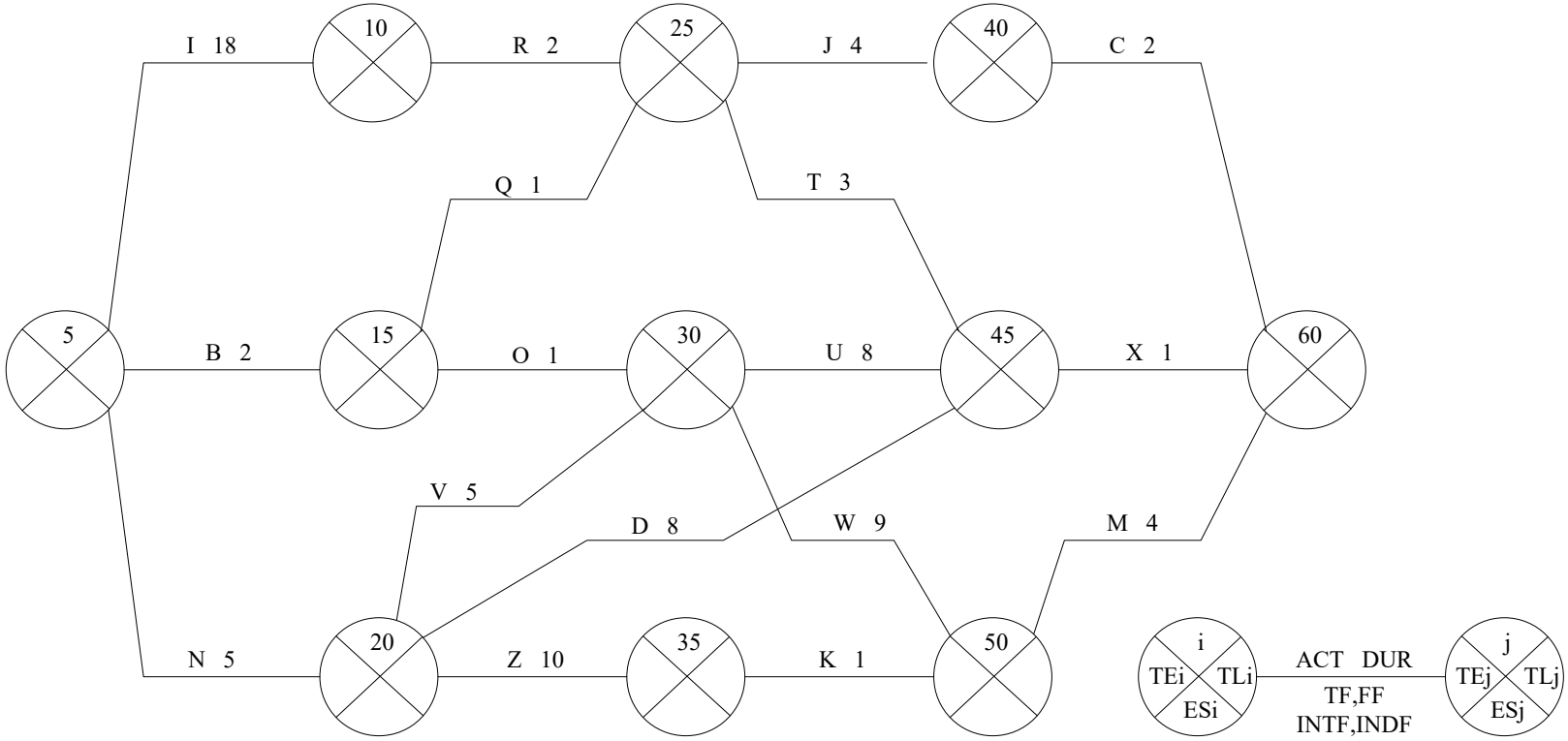

Problem 2.4 Calculate the schedule dates (TE and TL) and the four floats (TF, FF, INTF, and INDF).

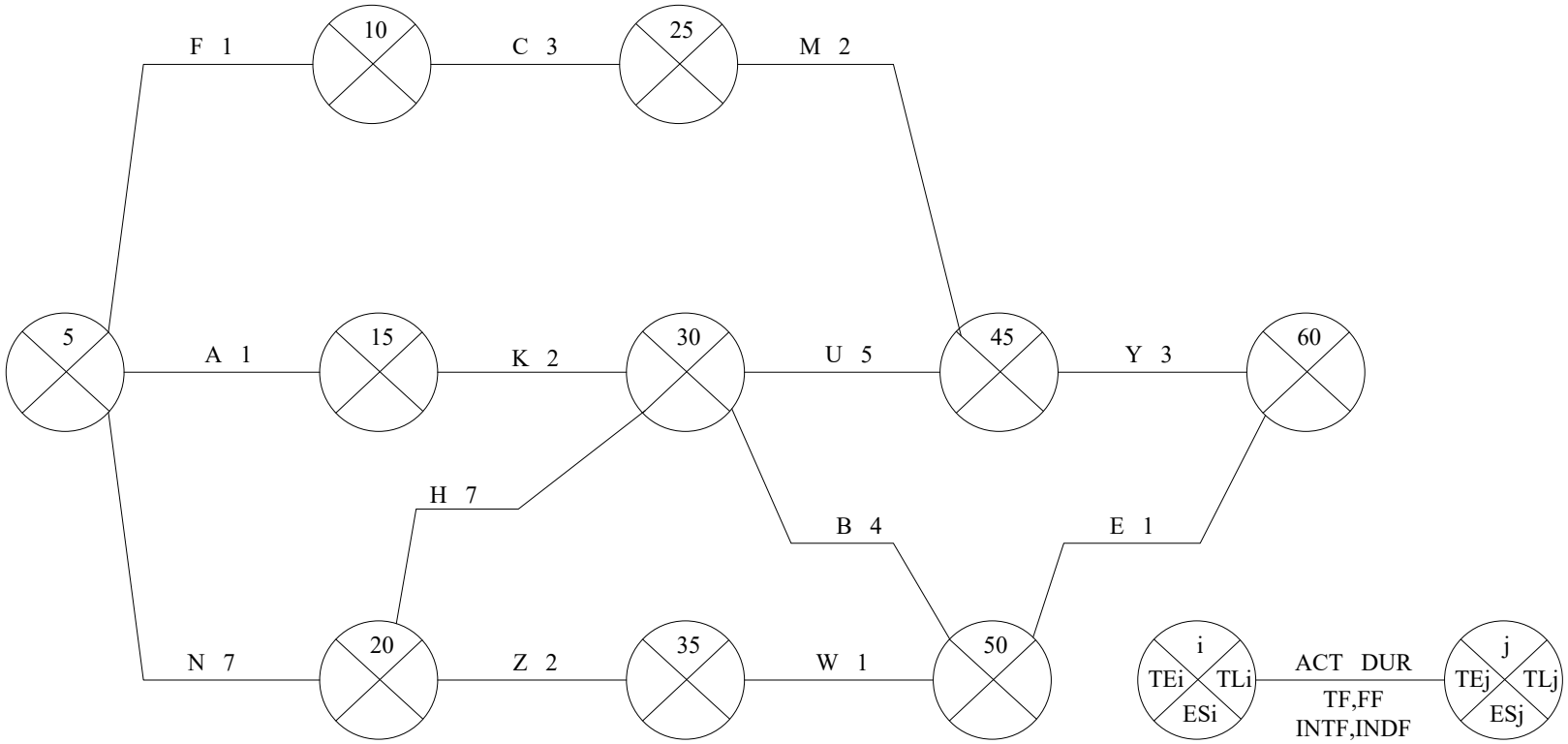

Solution 2.1

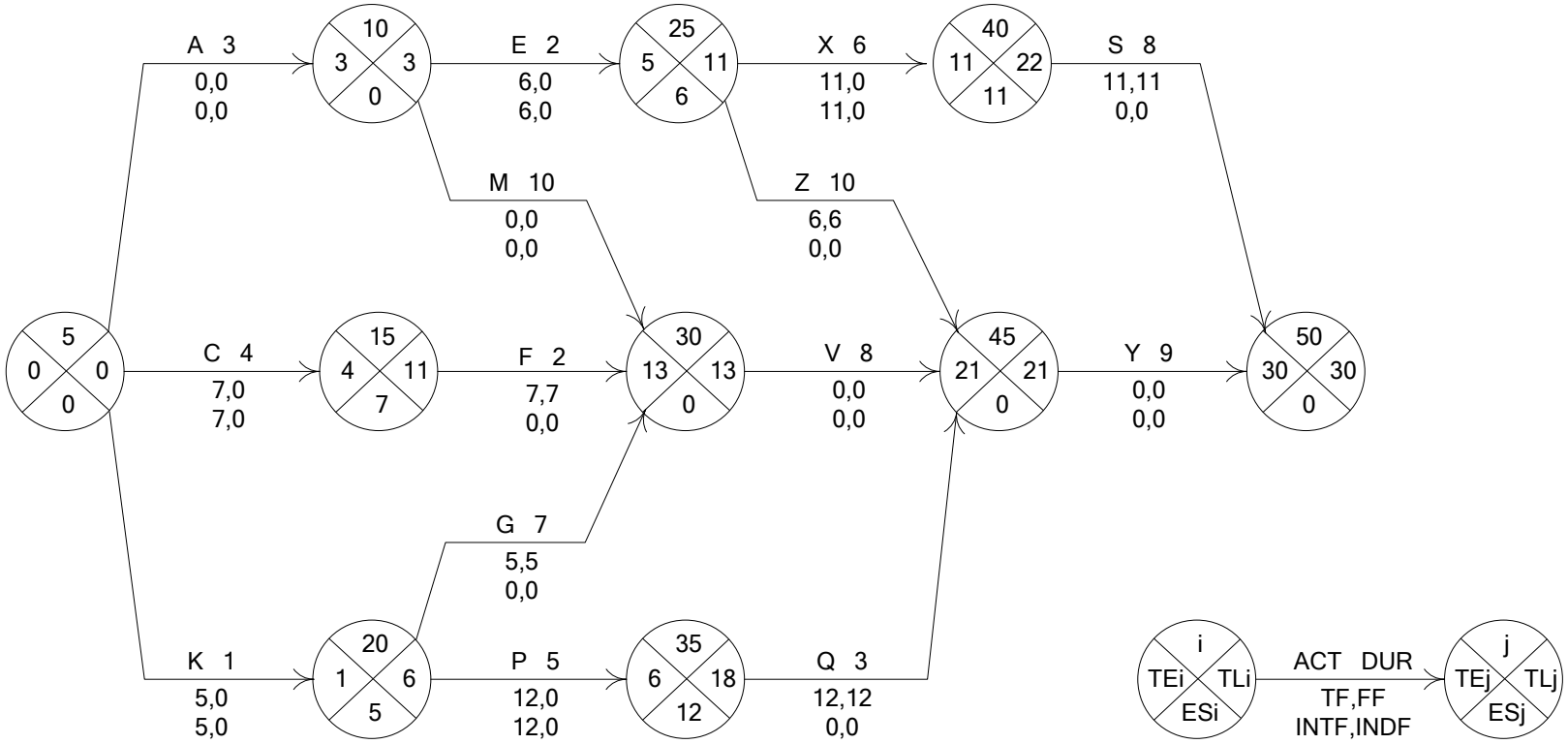
A 3
0,0
0,0
10
3
3
0
E 2
6,0
6,0
25
5
11
6
X 6
11,0
11,0
40
11
22
11
S 8
11,11
0,0
M 10
0,0
0,0
Z 10
6,6
0,0
5
0
0
0
C 4
7,0
7,0
15
4
11
7
F 2
7,7
0,0
30
13
13
0
V 8
0,0
0,0
45
21
21
0
Y 9
0,0
0,0
50
30
30
0
G 7
5,5
0,0
K 1
5,0
5,0
20
1
6
5
P 5
12,0
12,0
35
6
18
12
Q 3
12,12
0,0
i
TEi
TLi
ESi
ACT DUR
TF,FF
INTF,INDF
j
TEj
TLj
ESj

Solution 2.2

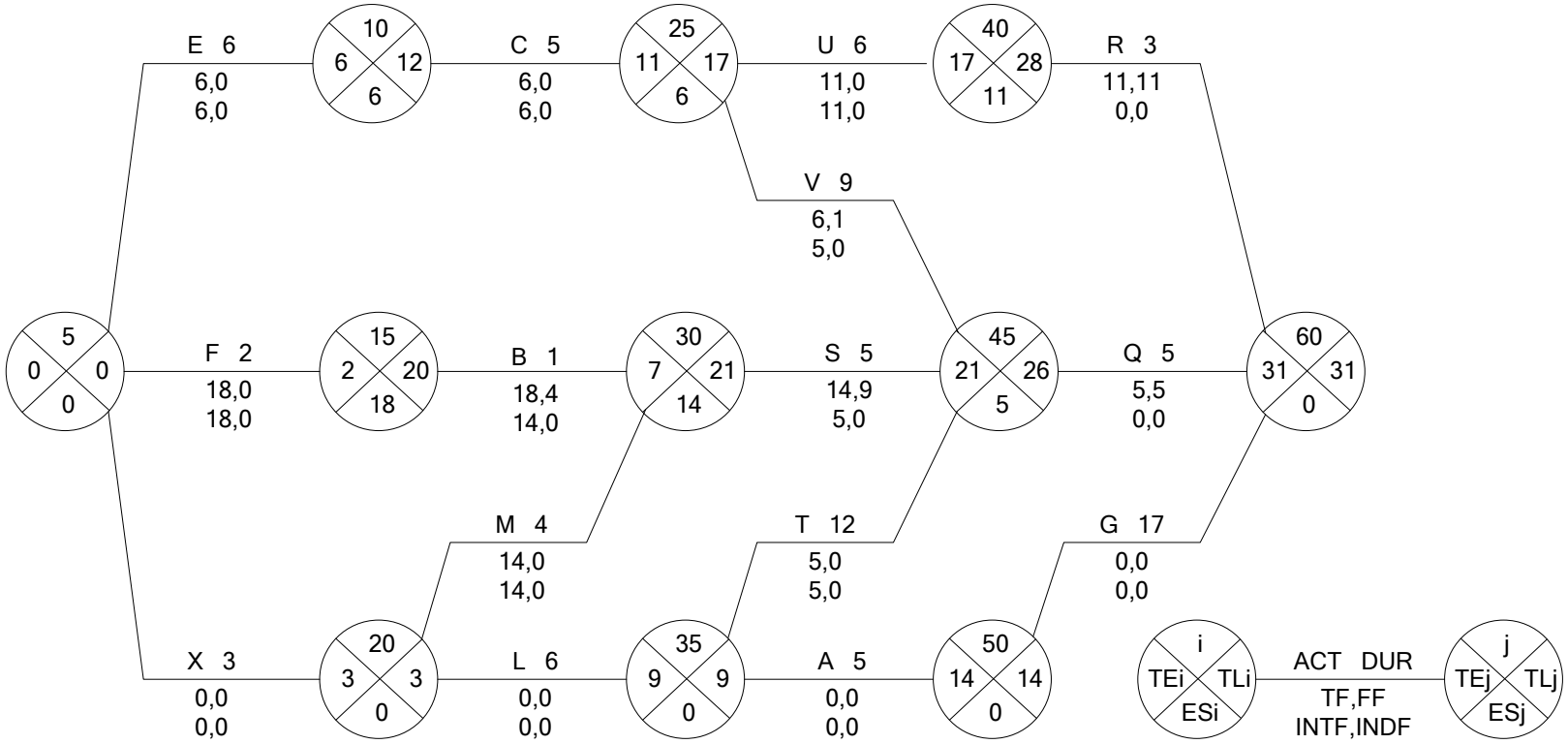
E 6
6,0
6,0
C 5
6,0
6,0
U 6
11,0
11,0
R 3
11,11
0,0
V 9
6,1
5,0
F 2
18,0
18,0
B 1
18,4
14,0
S 5
14,9
5,0
Q 5
5,5
0,0
M 4
14,0
14,0
T 12
5,0
5,0
G 17
0,0
0,0
X 3
0,0
0,0
L 6
0,0
0,0
A 5
0,0
0,0
ACT DUR
TF,FF
INTF,INDF
TEi
TLi
ESi
TEj
TLj
ESj

Solution 2.3

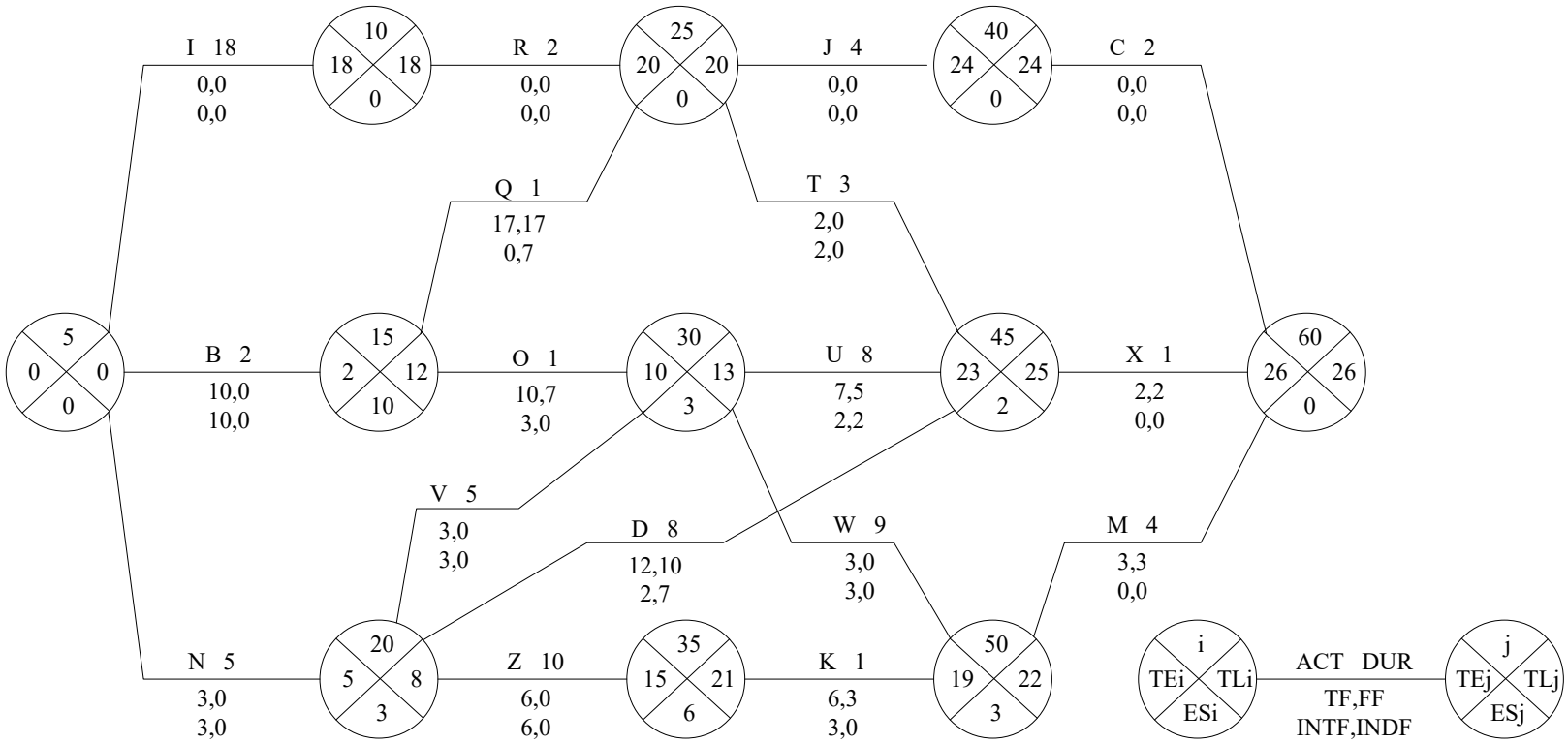
I 18
0,0
0,0
R 2
0,0
0,0
J 4
0,0
0,0
C 2
0,0
0,0
Q 1
17,17
0,7
T 3
2,0
2,0
B 2
10,0
10,0
O 1
10,7
3,0
U 8
7,5
2,2
X 1
2,2
0,0
V 5
3,0
3,0
D 8
12,10
2,7
W 9
3,0
3,0
M 4
3,3
0,0
N 5
3,0
3,0
Z 10
6,0
6,0
K 1
6,3
3,0
ACT DUR
TF,FF
INTF,INDF
TEi
TLi
ESi
TEj
TLj
ESj

Solution 2.4

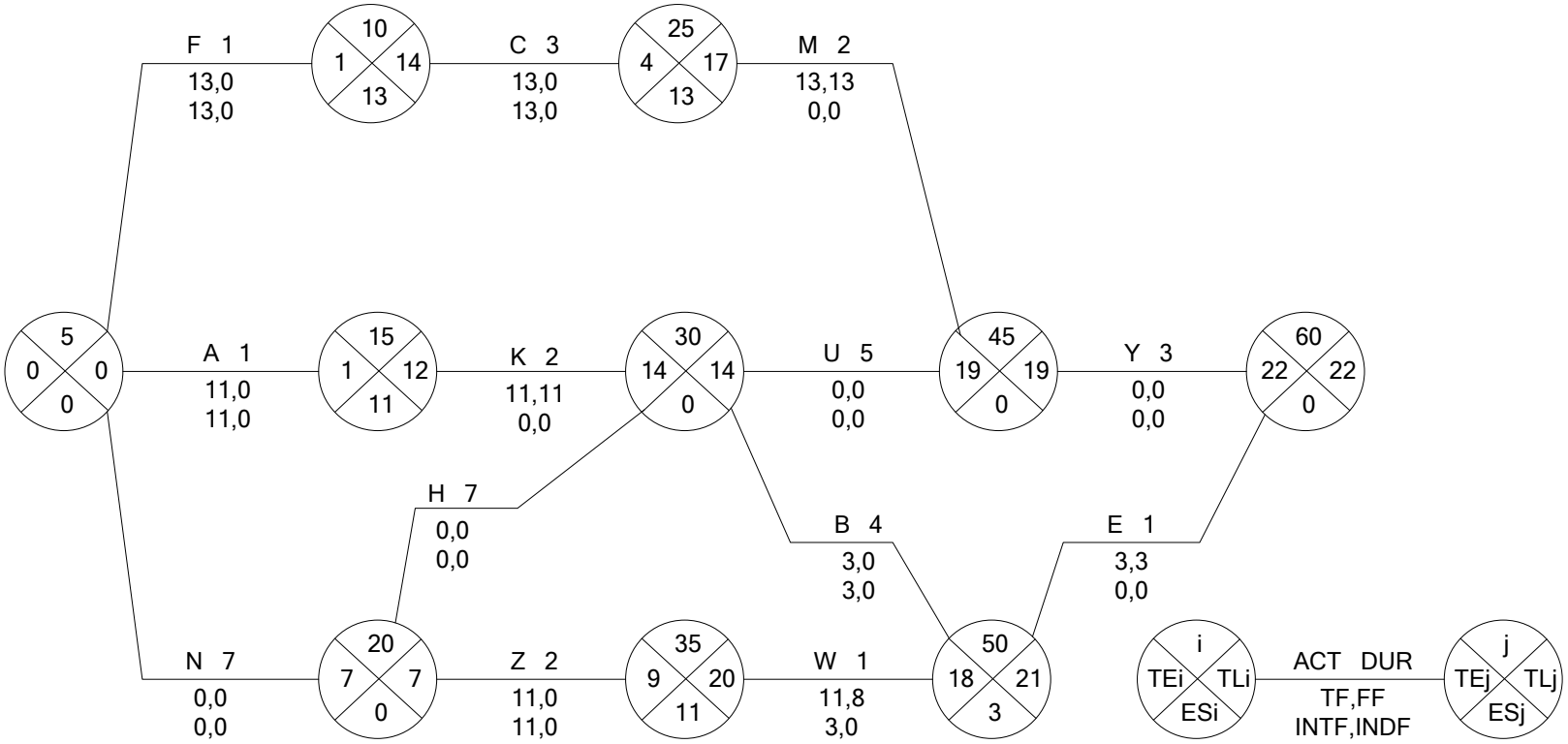
5
0 0
0
10
1 14
13
15
1 12
11
20
7 7
0
25
4 17
13
30
14 14
0
35
9 20
11
45
19 19
0
50
18 21
3
60
22 22
0
F 1
13,0
13,0
A 1
11,0
11,0
N 7
0,0
0,0
C 3
13,0
13,0
K 2
11,11
0,0
Z 2
11,0
11,0
H 7
0,0
0,0
M 2
13,13
0,0
U 5
0,0
0,0
W 1
11,8
3,0
B 4
3,0
3,0
Y 3
0,0
0,0
E 1
3,3
0,0
i
TEi TLi
ESi
ACT DUR
TF,FF
INTF,INDF
j
TEj TLj
ESj

MISSING FLOATS

Calculate TF, FF, and INTF.

1.

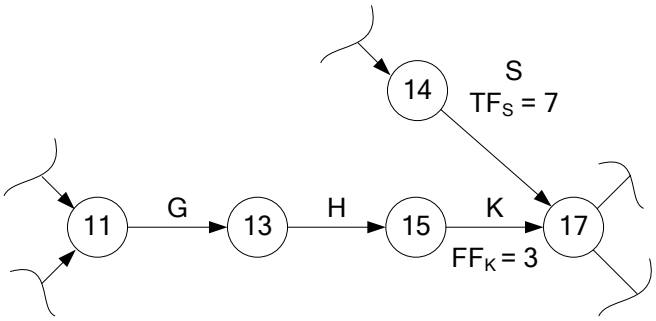

2.

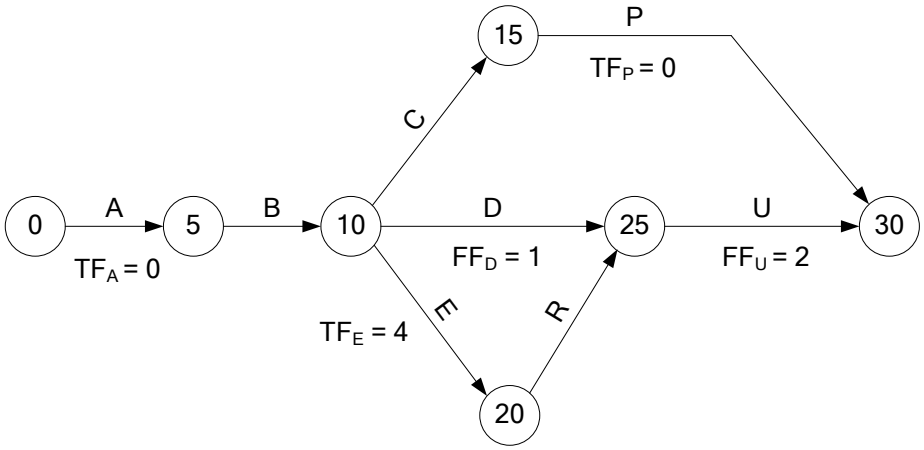

3.

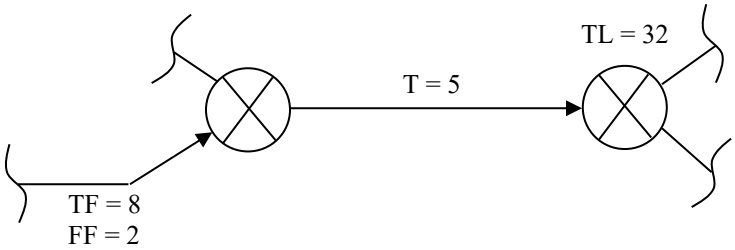

4.

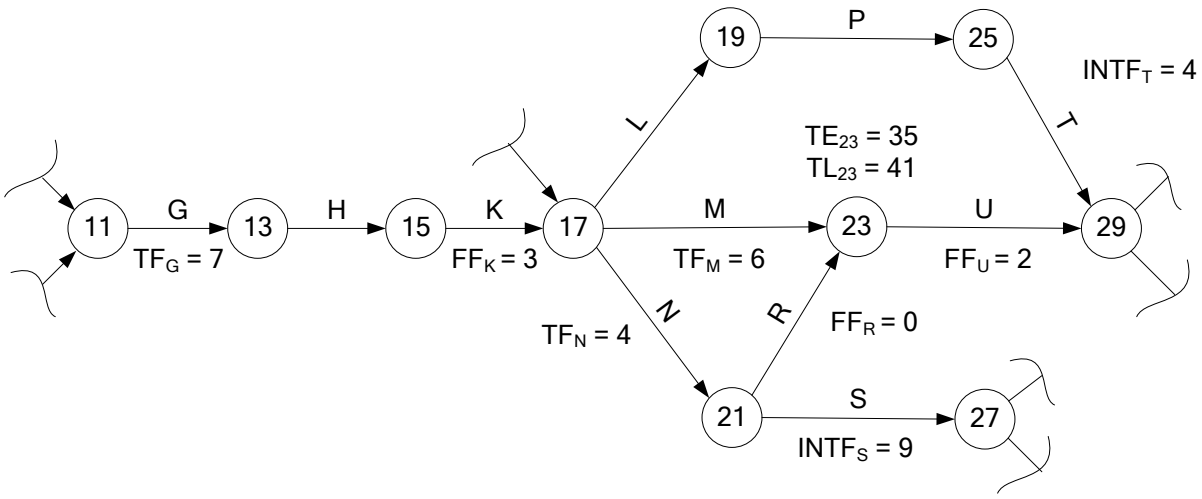
11
G
13
H
15
K
17
L
19
P
25
T
29
M
23
U
N
R
21
S
27
$TF_G = 7$
$FF_K = 3$
$TE_{23} = 35$
$TL_{23} = 41$
$TF_M = 6$
$FF_U = 2$
$TF_N = 4$
$FF_R = 0$
$INTF_T = 4$
$INTF_S = 9$

5.

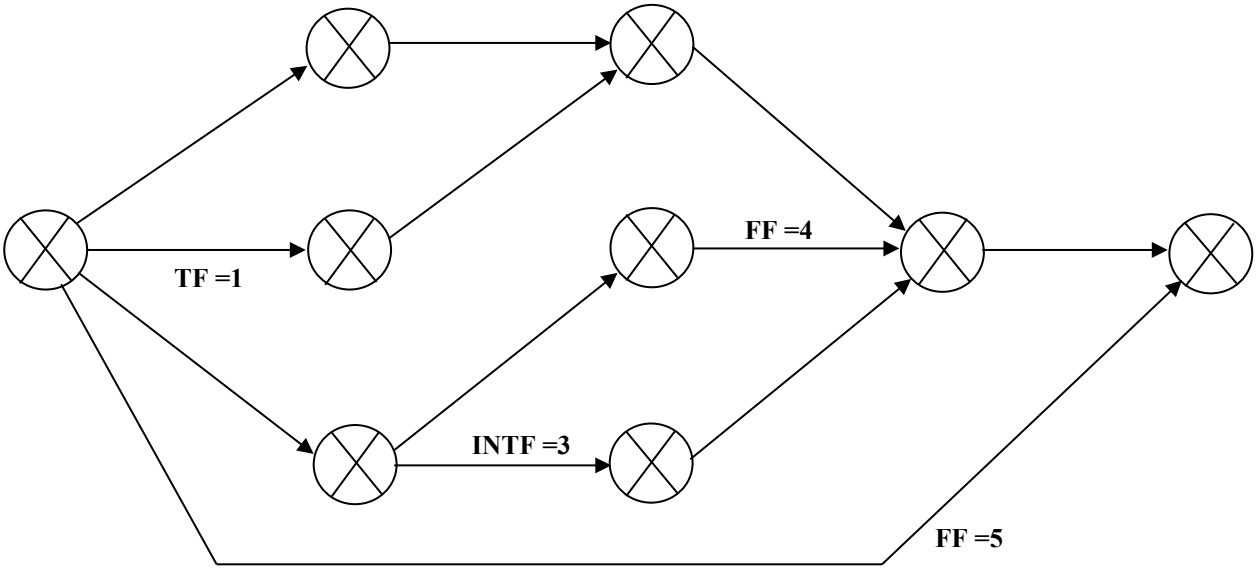
TF =1
FF =4
INTF =3
FF =5

FOUR MISSING FLOAT CONCEPTS (please check these concepts with the previous activity-on-arrow practice)

MS1. ZERO FREE FLOAT

If there is only one link goes into a node, its FF = 0".

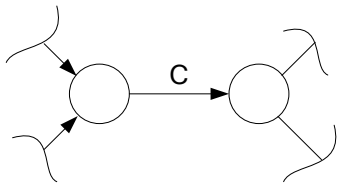

FF of activity C = 0

If there are many links go into the same node, at least one of them must have FF = 0.

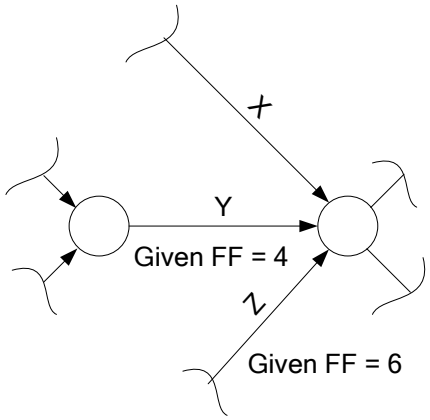

FF of activity X = 0

MS2. SAME INTERFERE FLOAT

All the links that go into the same node have the same INTF.

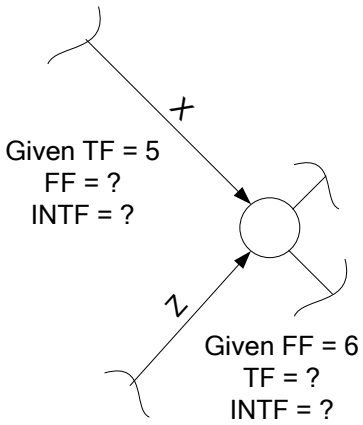

According to MS1, FF of X = 0. Thus, INTF of X = 5.
According to MS2, INTF of Z equals to INTF of X, which is 5.
Thus, TF of Z is 11.

MS3. ACTIVITY CHAIN'S TOTAL FLOAT

Total floats of activities on an activity chain are the same.

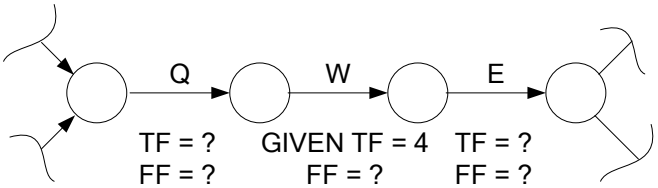

Activity Q, W, and E are activity chain. Thus,
TF of Q and E equal to TF of W according to MS3.
FF of Q, W, and E equal to 0 according to MS1.

Solution

1.

1.1 From MS1, at node 17, since two links go into the same node and FF of K = 3, FF of S = 0. Thus, INTF of S = 7.

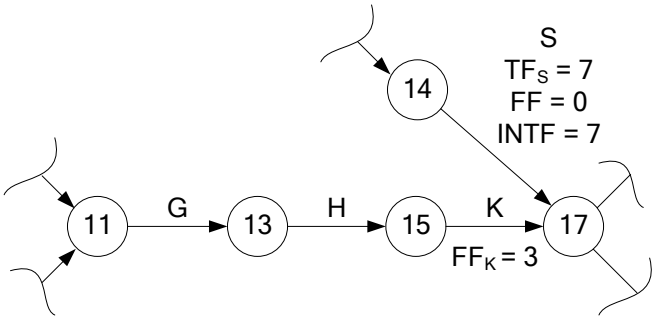

1.2 From MS2, links go into the same node have the same INTF.

Thus, INTF of K = 7, and TF of K = 10.

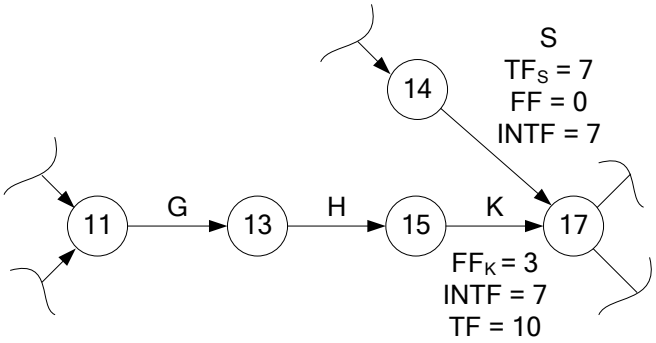

1.3 From MS3, activities in the activity chain have the same TF.

Thus, TF of K, G, and H are 10.

1.4 From MS1, FF of G and H = 0. INTF of G and H are 10.

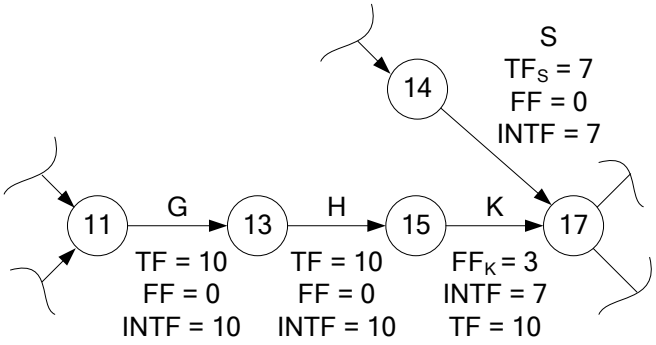

2.

2.1) **MS1 (one link goes into one node, FF of the link = 0)**

FF of A, B, C, and E= 0.

So, INTF of A and E = 0 and 4 respectively.

MS1 (many links going to the same node, one of them must have zero FF)

FF of P = 0. Thus, INTF of P = 0. And also FF of R.

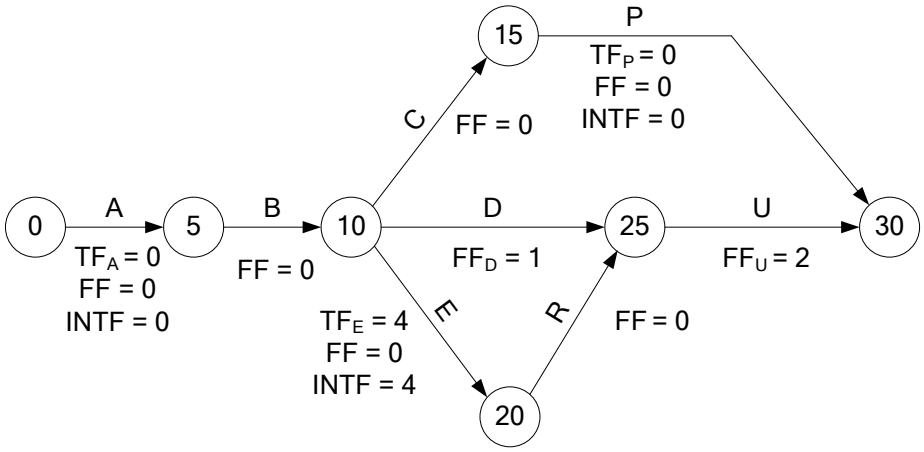

2.2) **MS2 (many links going into the same have the same INTF)**

INTF of U = INTF of P = 0. So, TF of U = 2.

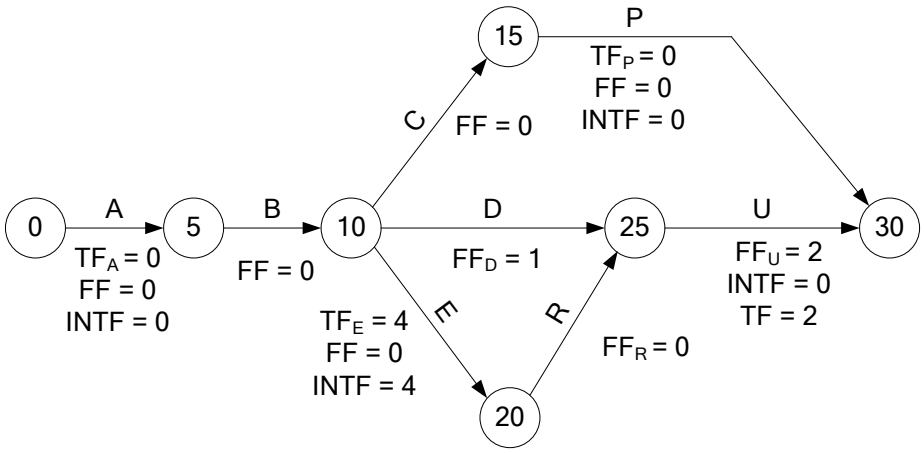

2.3) **MS3 (activities on activity chain have the same TF)**

TF of B = TF of A.

TF of R = TF of E. Then calculate INTF of R, which will give us INTF of D according MS2. Thus, TF of D can be calculated. ☺

TF of C = TF of P.

Note: up to this point, you should be able to get all the TF, FF, and also INTF. It should also be mentioned that the given TF of A and P are not necessary. WHY???

3. **One link** goes into **one node** → FF = 0
   Or **Many links** go into the same node → **at least one** of the links **must have FF = 0**

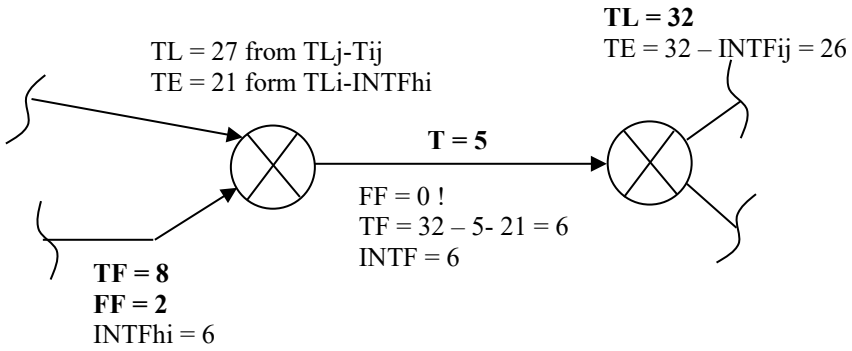

4.
4.1) **"Only one link goes into one node"**, we should be able to spot out activities whose FF = 0, which are activities G, H, N, L, P, and S.
4.2) **"Many links go into the same node, at least one of them must have FF = 0"**. Thus, FF of T = 0

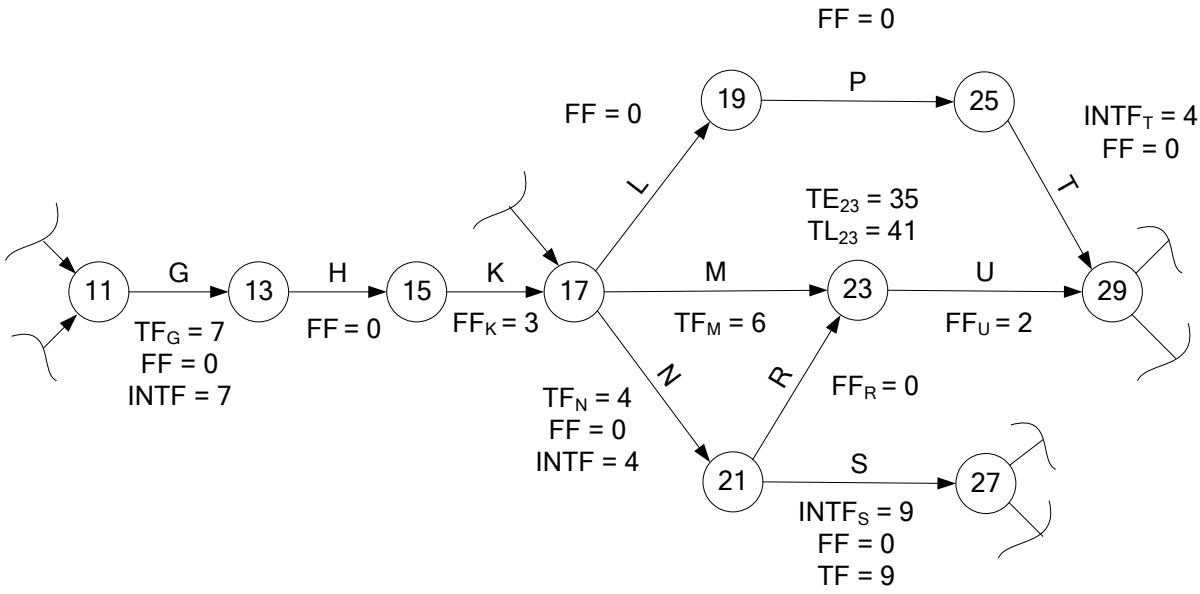

4.3) **"Total float on activities on an activity chain have the same TF"**
Thus, we should be able to get TF of H and K (from Chain G-H-K), L and P (from Chain L-P-T).

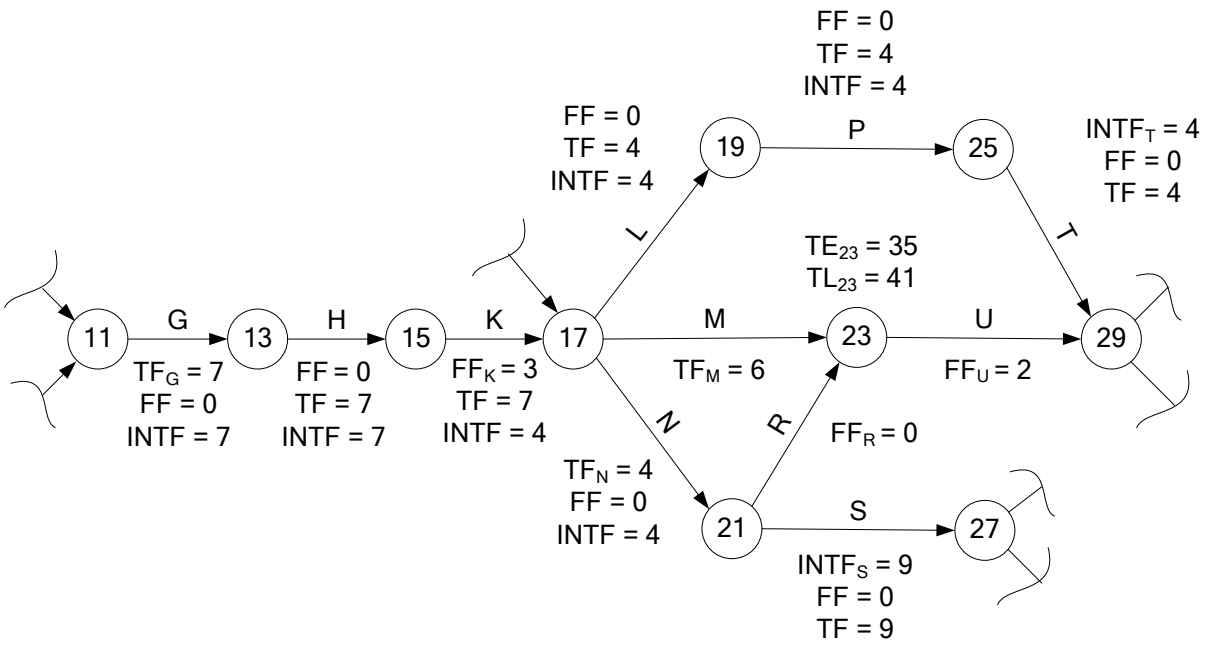

4.4) **"Activities going to the same node have the same INTF"**
Thus, we can calculate INTF of M and R (going to node 23), and U (going to node 29).
Note: INTF of M and R is $TL_{23} - TE_{23}$ (you should remember this by now)

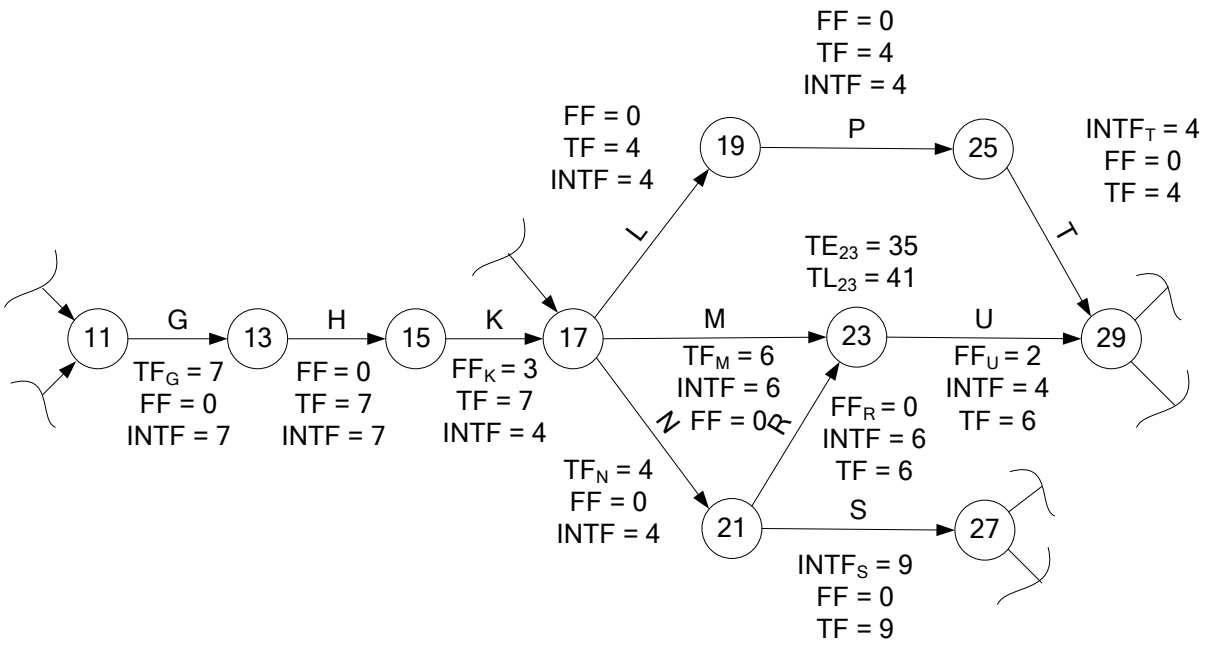

5. It is crucial to identify critical path, and knowing that any links going to the **same node** have the **same INTF**.

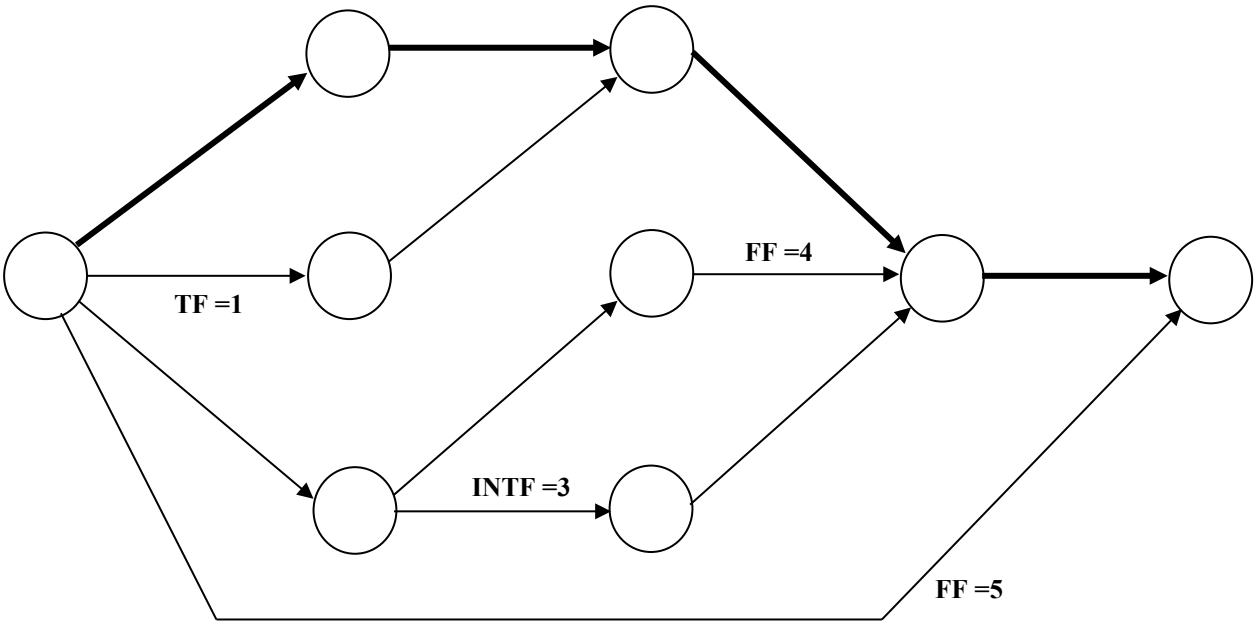

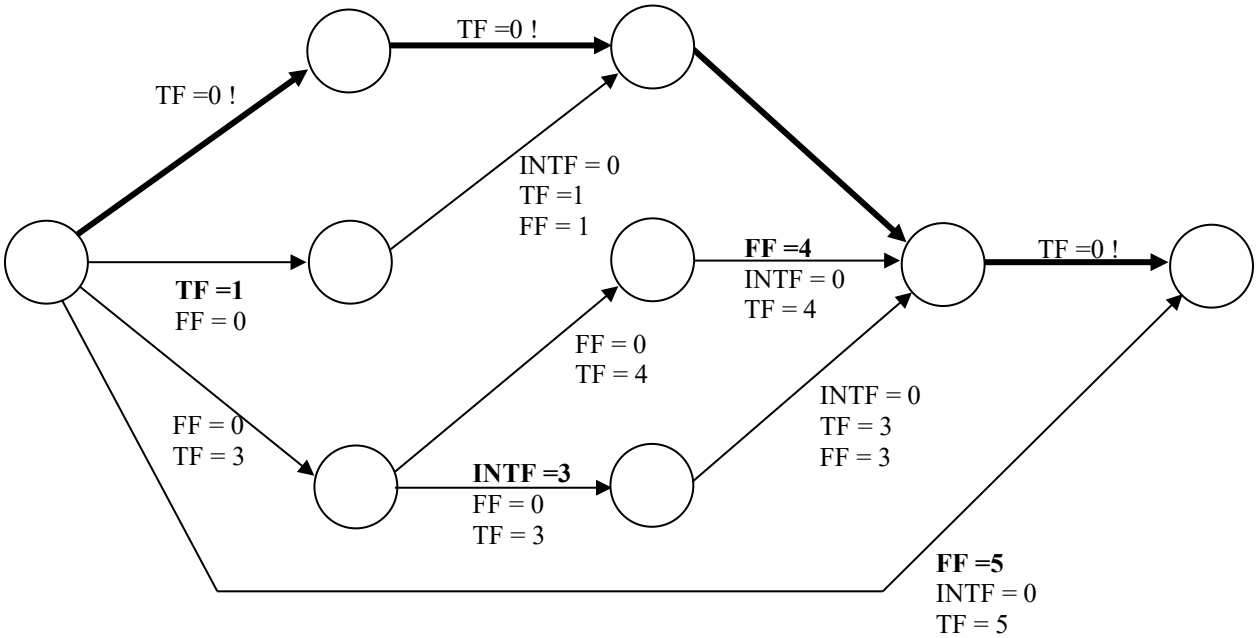

3. ACTIVITY-ON-NODE SCHEDULING

Problem 3.1

A. Construct a precedence diagram.

B. On the diagram, compute the four schedule dates (ESD, EFD, LSD, LFD) and the four floats (TF, FF, INTF, and IDF) for each activity, and the lag for each link.

C. Identify the critical path

No	ACT	DUR	PREDECESSORS
5	B	5	
10	M	4	B
15	N	9	B
20	Q	15	B
25	A	1	M,N
30	F	4	N,Q
35	X	9	Q
40	C	9	Q
45	Y	9	A,F,X
50	S	6	F
55	J	5	X,F
60	T	10	C
65	V	5	Y,S
70	U	10	V,T,J

Problem 3.2

A. Construct a precedence diagram.

B. On the diagram, compute the four schedule dates (ESD, EFD, LSD, LFD) and the four floats (TF, FF, INTF, and IDF) for each activity, and the lag for each link.

C. Identify the critical path

No	ACT	DUR	PREDECESSORS
5	A	1	
10	B	8	A
15	C	4	A
20	P	7	A
25	L	2	B
30	M	4	C
35	Q	4	P,C
40	N	9	P
45	Y	5	L,Q
50	F	10	M
55	J	2	Q
60	S	2	N
65	V	5	Y,F,J
70	Q1	1	V,S

Problem 3.3

A. Construct a precedence diagram.

B. On the diagram, compute the four schedule dates (ESD, EFD, LSD, LFD) and the four floats (TF, FF, INTF, and IDF) for each activity, and the lag for each link.

C. Identify the critical path

No	ACT	DUR	PREDECESSORS
5	B	5	
10	M	4	B
15	N	9	B
20	X	15	B
25	A	5	M,N
30	F	6	N,X
35	Q	2	X
40	C	4	X
45	Y	10	A
50	S	10	F,A
55	R	2	Q,F
60	T	5	C,Q
65	K	7	Y,S,R
70	U	3	K,T

Problem 3.4

A. Construct a precedence diagram.

B. On the diagram, compute the four schedule dates (ESD, EFD, LSD, LFD) and the four floats (TF, FF, INTF, and IDF) for each activity, and the lag for each link.

C. Identify the critical path

No	ACT	DUR	PREDECESSORS
5	A	9	
10	B	1	A
15	C	10	A
20	P	10	A
25	L	2	B,C
30	F	10	C,P
35	Q	8	P
40	N	6	P
45	Y	7	L
50	T	4	F,L
55	R	9	F,Q
60	S	1	N,Q
65	V	10	Y,T,R
70	U	1	V,S

Solution 3.1

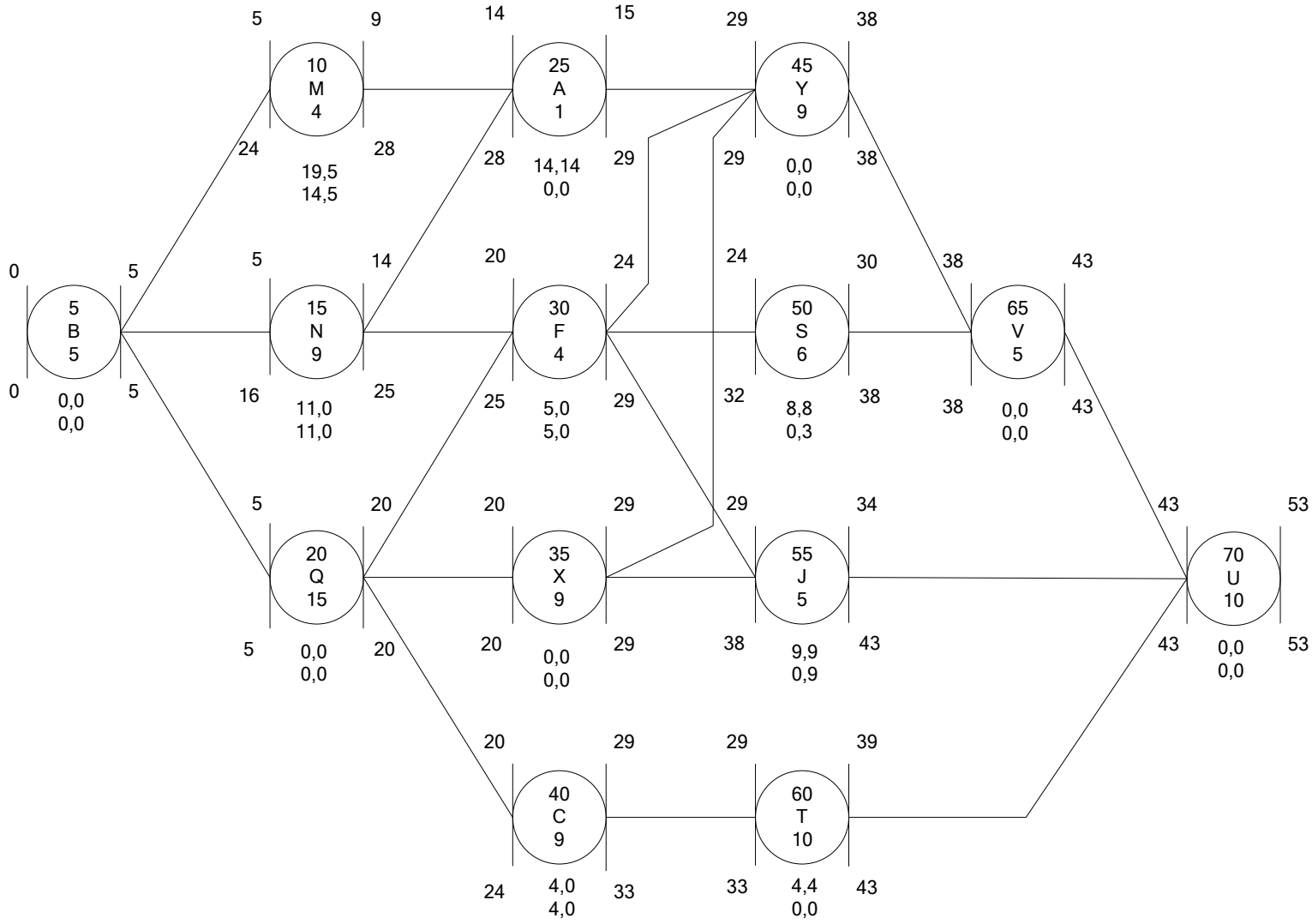
0
5
B
5
0
0,0
0,0
5
5
10
M
4
9
24
28
19,5
14,5
14
15
25
A
1
28
29
14,14
0,0
29
38
45
Y
9
29
38
0,0
0,0
5
14
15
N
9
16
25
11,0
11,0
20
24
30
F
4
25
29
5,0
5,0
24
30
38
50
S
6
32
38
8,8
0,3
38
43
65
V
5
38
43
0,0
0,0
5
20
20
Q
15
5
20
0,0
0,0
20
29
35
X
9
20
29
0,0
0,0
29
34
55
J
5
38
43
9,9
0,9
43
53
70
U
10
43
53
0,0
0,0
20
29
40
C
9
24
33
4,0
4,0
29
39
60
T
10
33
43
4,4
0,0

Solution 3.2

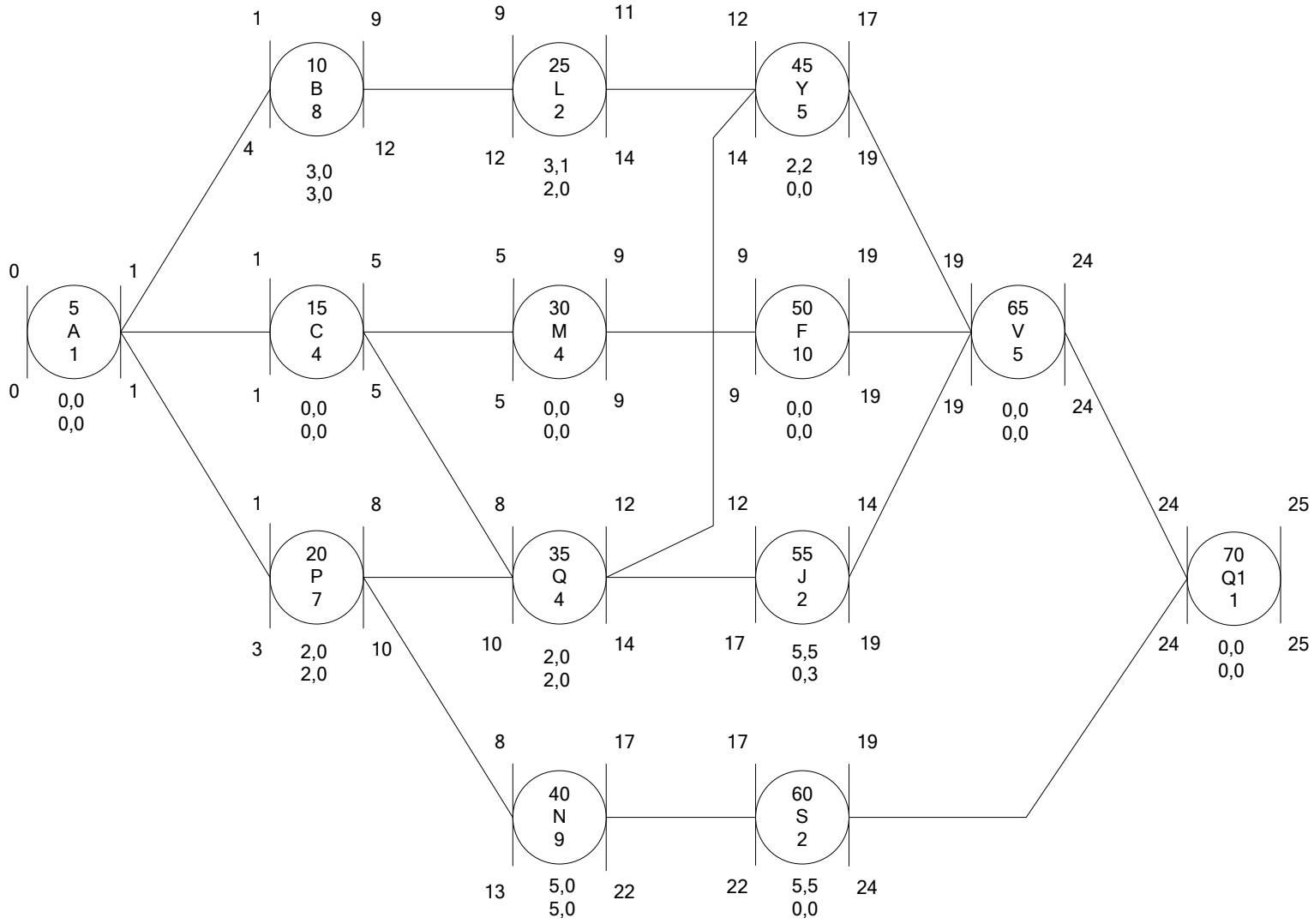
0
1
5
A
1
0,0
0,0
0
1
1
5
15
C
4
0,0
0,0
1
5
5
9
30
M
4
0,0
0,0
5
9
9
19
50
F
10
0,0
0,0
9
19
19
24
65
V
5
0,0
0,0
19
24
1
8
20
P
7
2,0
2,0
3
10
8
12
35
Q
4
2,0
2,0
10
14
12
14
55
J
2
5,5
0,3
17
19
24
25
70
Q1
1
0,0
0,0
24
25
8
17
40
N
9
5,0
5,0
13
22
17
19
60
S
2
5,5
0,0
22
24
1
9
10
B
8
3,0
3,0
4
12
9
11
25
L
2
3,1
2,0
12
14
12
17
45
Y
5
2,2
0,0
14
19

Solution 3.3

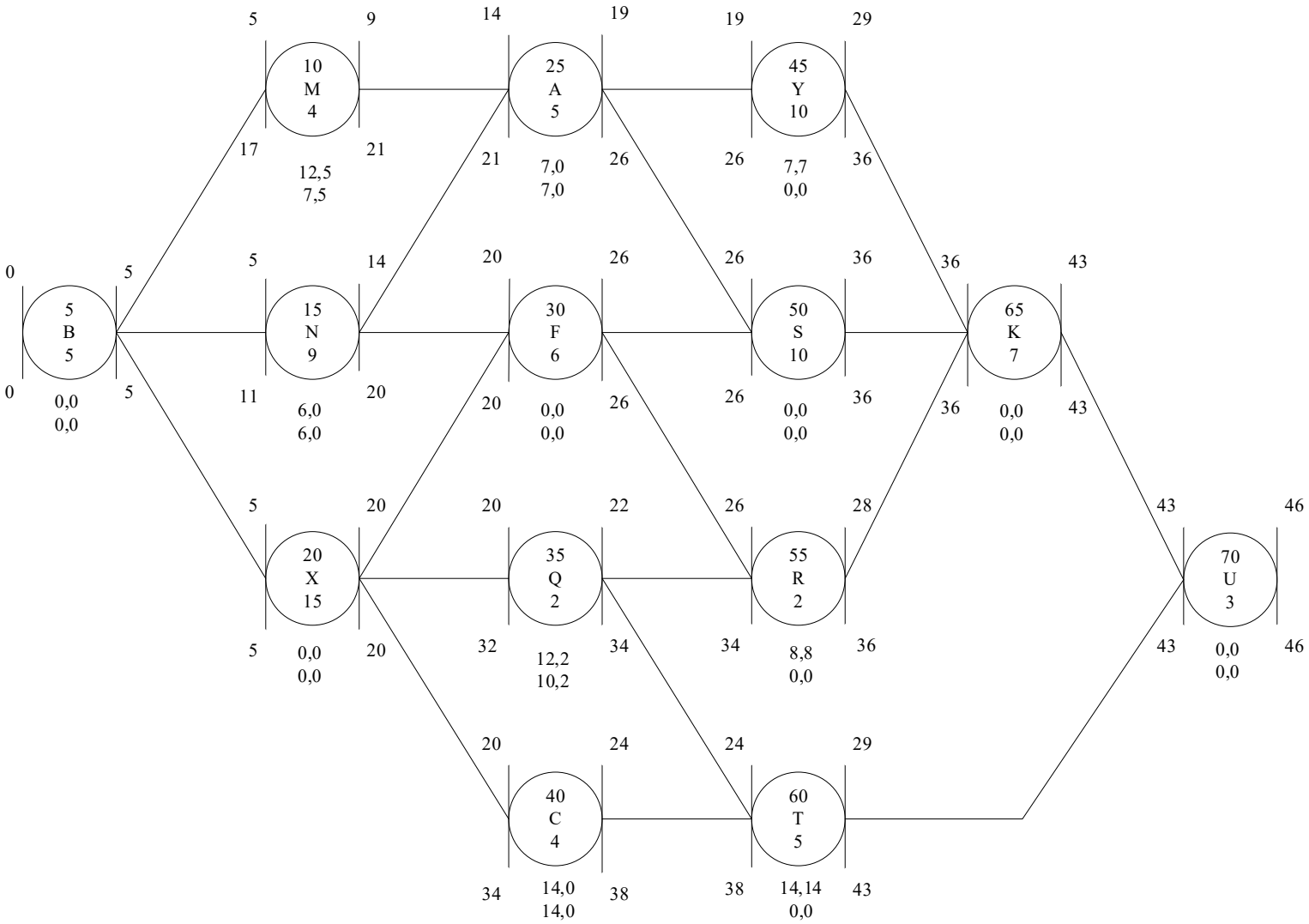
0
5
B
5
0
0,0
0,0
5
5
10
M
4
9
17
21
12,5
7,5
14
19
25
A
5
21
26
7,0
7,0
19
29
45
Y
10
26
36
7,7
0,0
5
14
15
N
9
11
20
6,0
6,0
20
26
30
F
6
20
26
0,0
0,0
26
36
50
S
10
26
36
0,0
0,0
36
43
65
K
7
36
43
0,0
0,0
5
20
20
X
15
5
20
0,0
0,0
20
22
35
Q
2
32
34
12,2
10,2
26
28
55
R
2
34
36
8,8
0,0
43
46
70
U
3
43
46
0,0
0,0
20
24
40
C
4
34
38
14,0
14,0
24
29
60
T
5
38
43
14,14
0,0

Solution 3.4

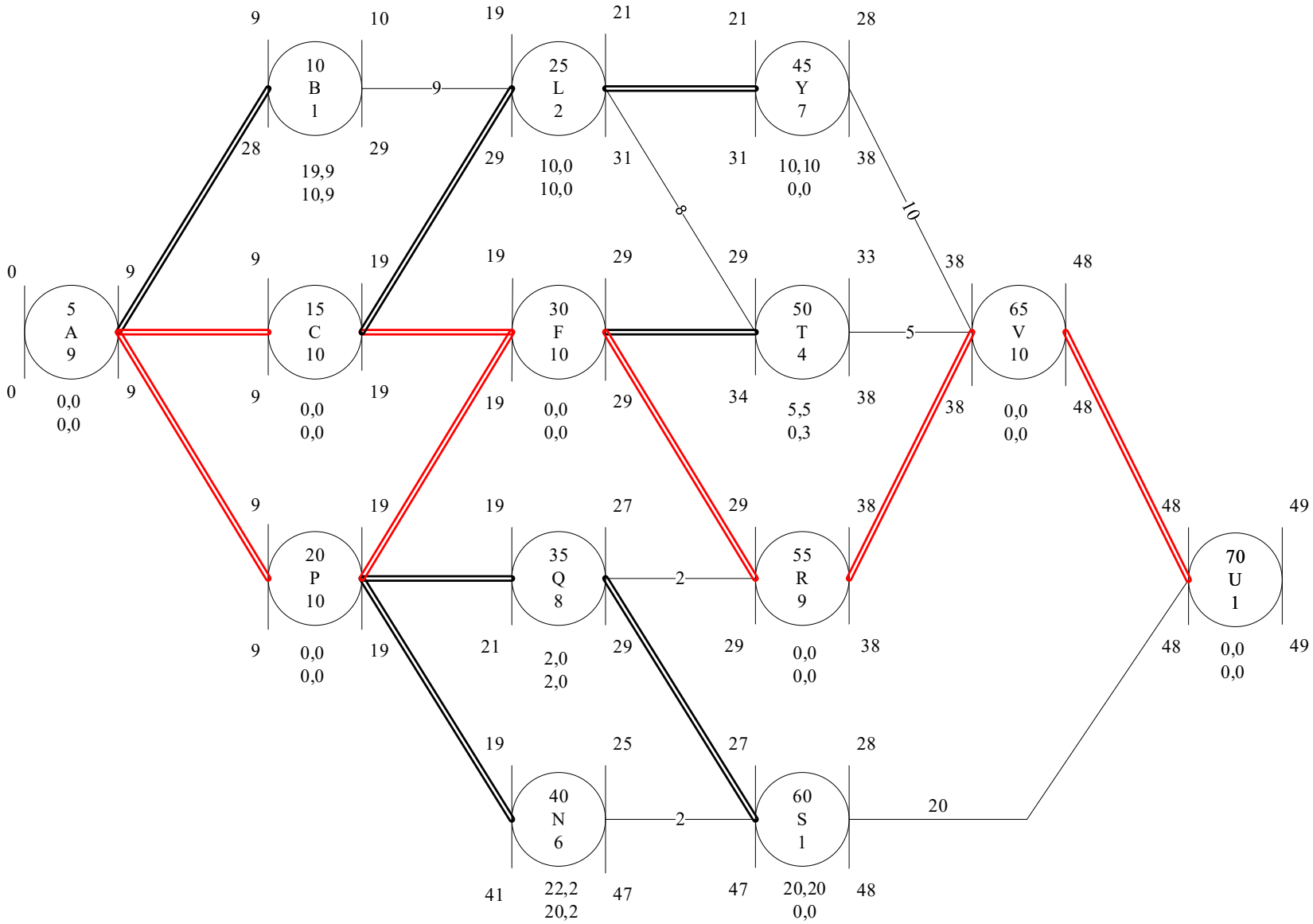
0
9
5
A
9
0
9
0,0
0,0
9
10
10
B
1
28
29
19,9
10,9
9
19
25
L
2
29
31
10,0
10,0
21
28
45
Y
7
31
38
10,10
0,0
8
10
9
19
15
C
10
9
19
9
19
0,0
0,0
19
29
30
F
10
19
29
0,0
0,0
29
33
50
T
4
34
38
5,5
0,3
5
38
48
65
V
10
38
48
0,0
0,0
9
19
20
P
10
9
19
9
19
0,0
0,0
19
27
35
Q
8
21
29
2,0
2,0
2
29
38
55
R
9
29
38
0,0
0,0
48
49
70
U
1
48
49
0,0
0,0
19
25
40
N
6
41
47
22,2
20,2
2
27
28
60
S
1
47
48
20,20
0,0
20

Solution 3.4 (Solution by Microsoft Project 2016 with custom fields so that early and late dates match those in CEE536)

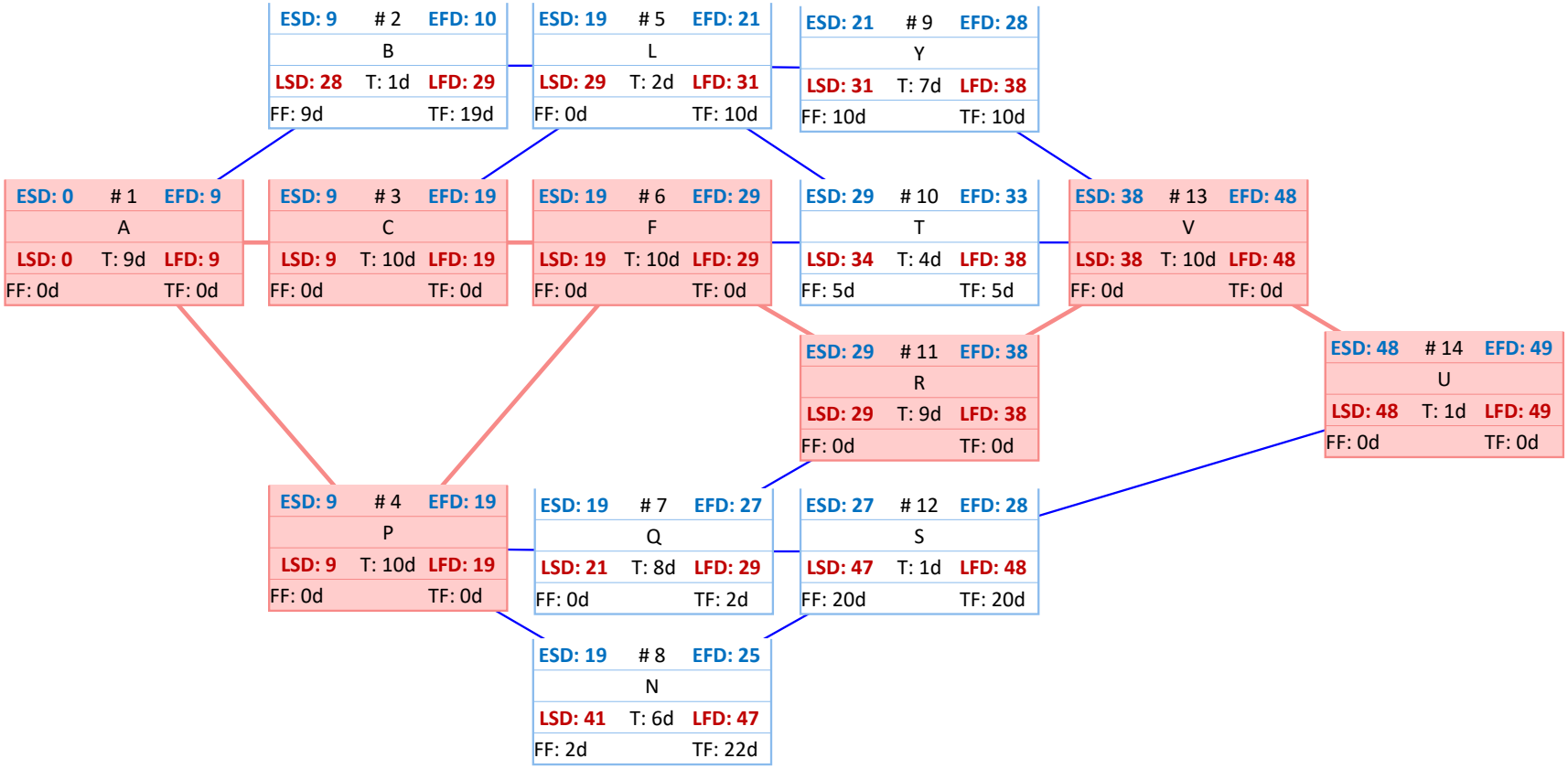

Problem 3.5

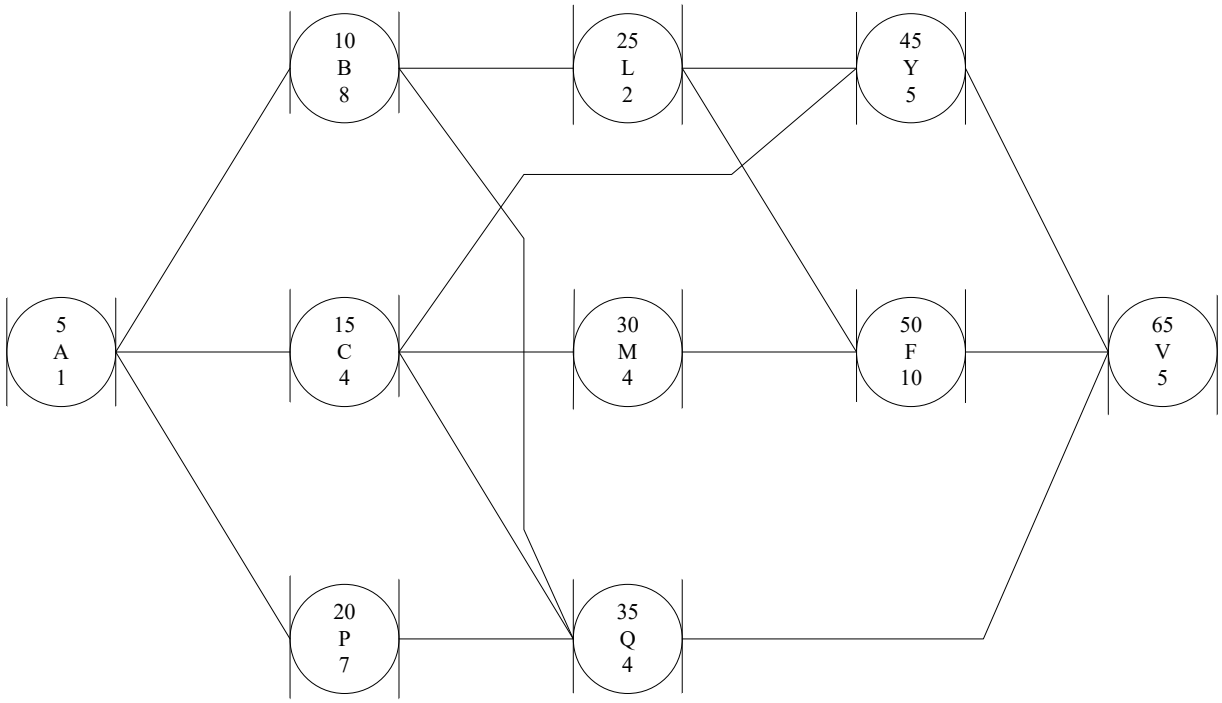

Problem 3.6

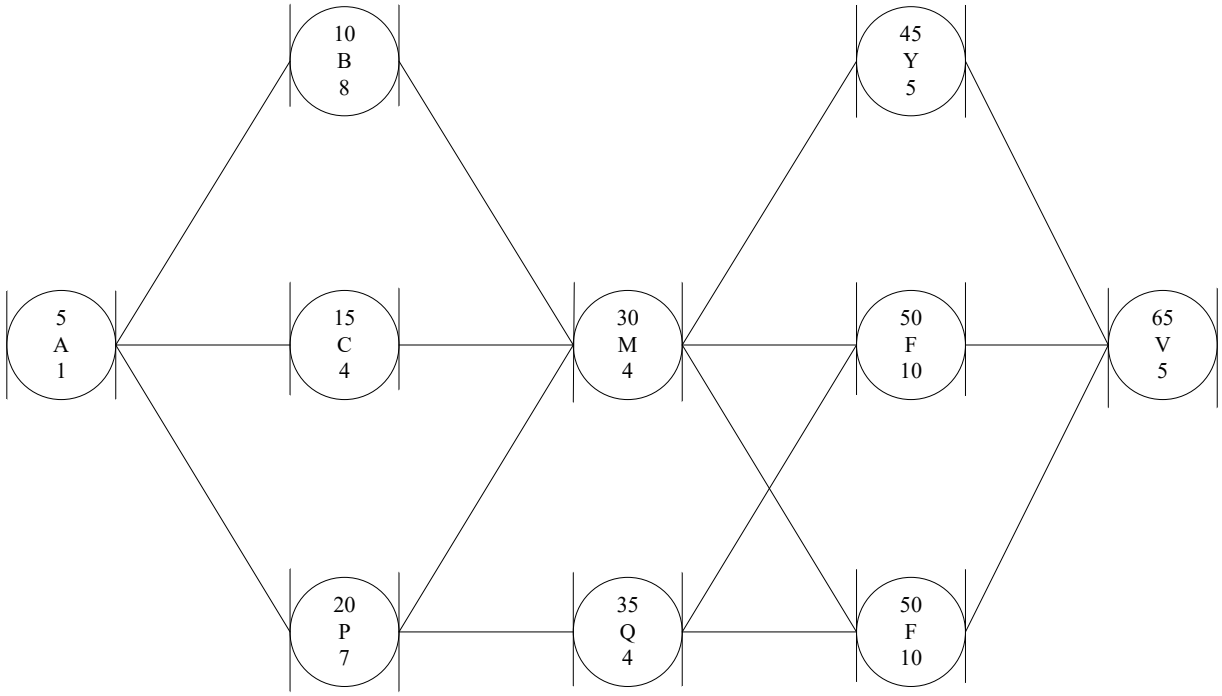

Problem 3.7

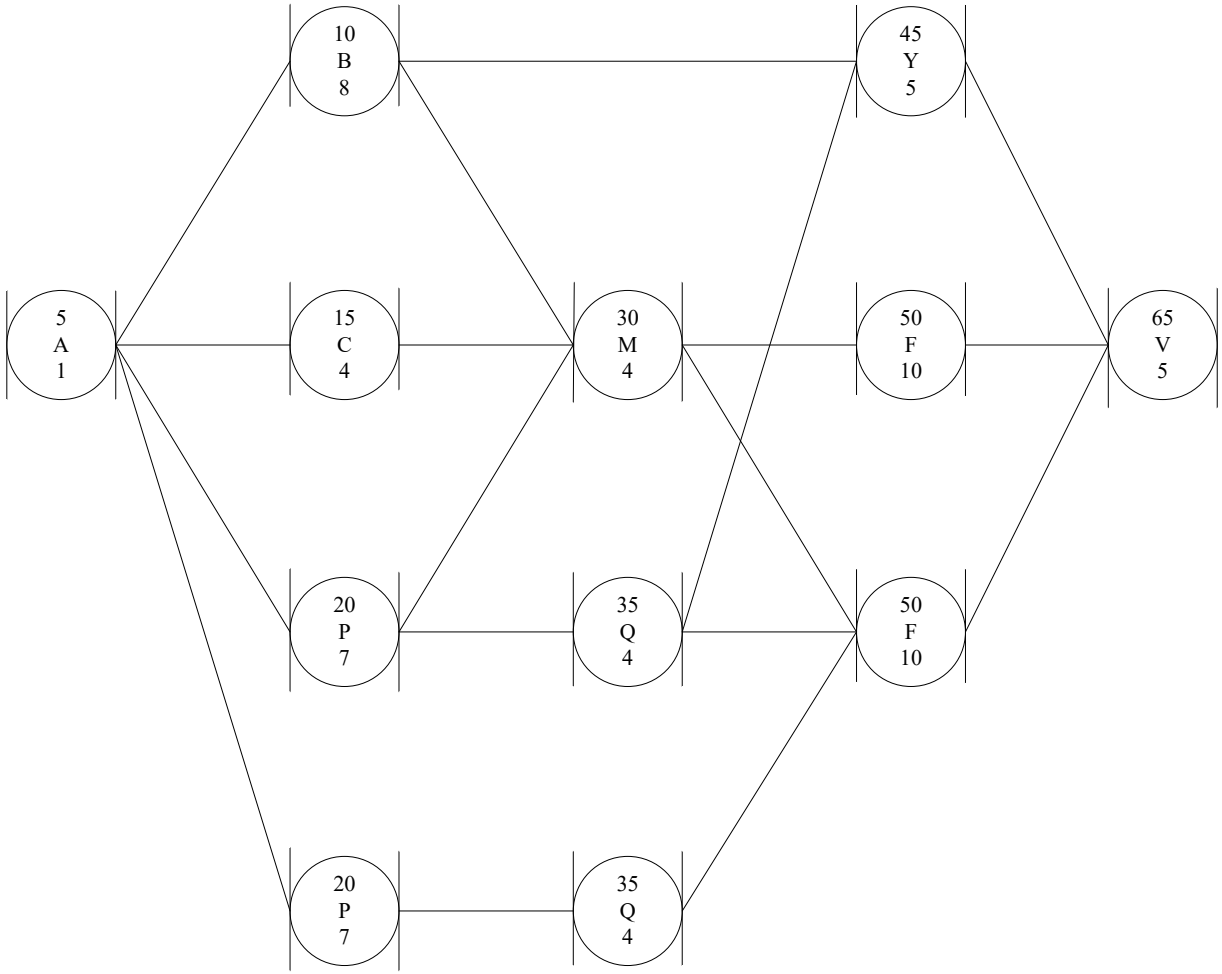

Problem 3.8

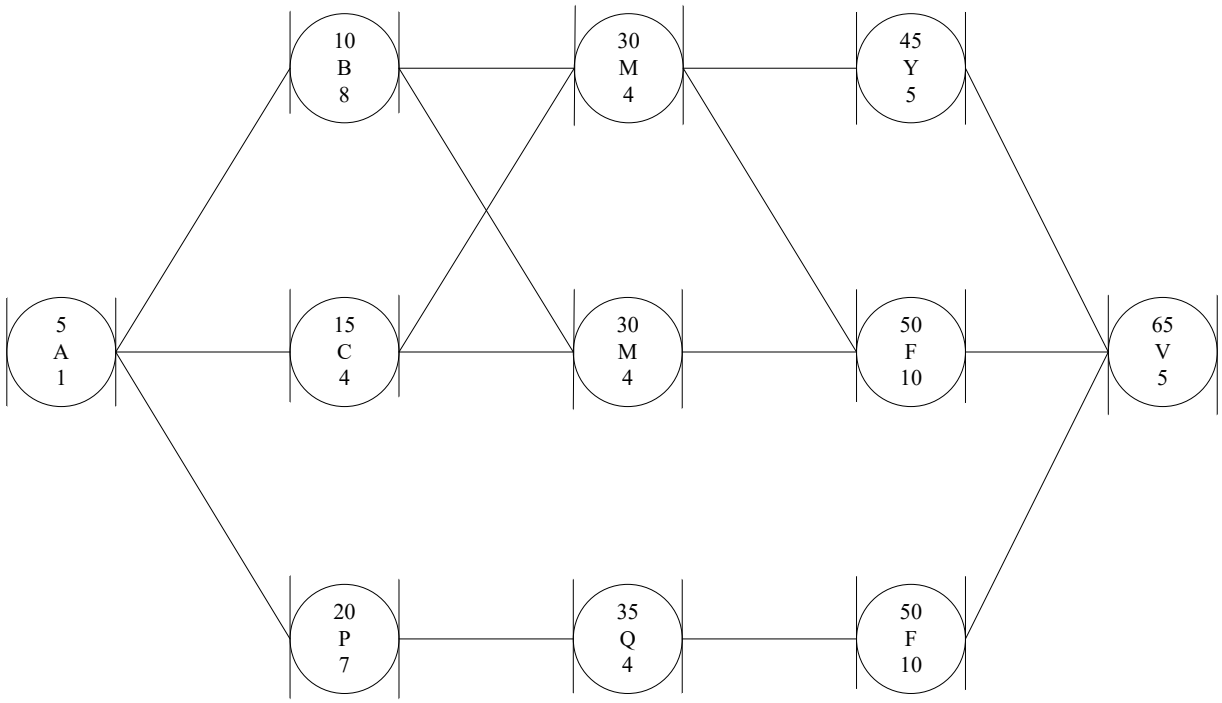

Problem 3.9

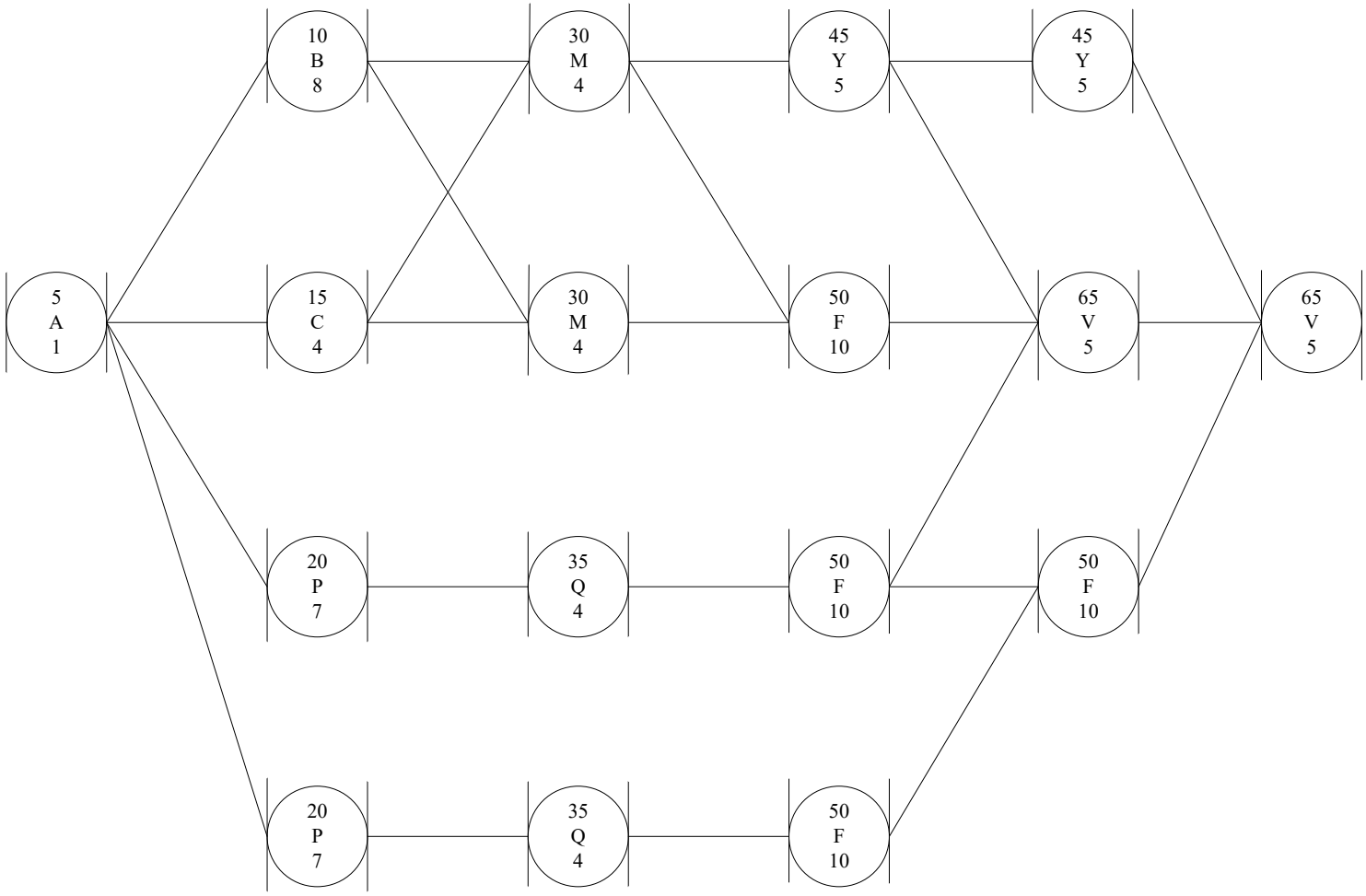
10
B
8
30
M
4
45
Y
5
45
Y
5
5
A
1
15
C
4
30
M
4
50
F
10
65
V
5
65
V
5
20
P
7
35
Q
4
50
F
10
50
F
10
20
P
7
35
Q
4
50
F
10

4. SCHEDULING USING A LINK MATRIX

Problem 4.1 Using matrix to calculate TF and FF

NO	ACT	DUR	PREDECESSORS
5	A	4	
10	B	5	A
15	C	3	A
20	Q	8	A
25	M	1	B,C
30	L	8	C,B,Q
35	X	2	Q,C
40	N	7	Q
45	Z	8	M,L
50	S	8	L,M
55	J	6	X,L
60	T	4	N
65	V	10	Z,S,J
70	Q1	6	V,T

Problem 4.2 Using matrix to calculate TF and FF

NO	ACT	DUR	PREDECESSORS
5	A	7	
10	B	5	A
15	C	7	A
20	P	5	A
25	M	1	B,C
30	L	5	C,B,P
35	N	2	P,C
40	Y	9	P
45	G	5	M,L
50	S	9	L,M,N
55	R	2	N
60	T	5	Y,N
65	K	9	G,S
70	Q1	5	K,T,R

Problem 4.3 Using matrix to calculate TF and FF

NO	ACT	DUR	PREDECESSORS
5	A	10	
10	B	9	A
15	C	7	A
20	Q	9	A
25	L	1	B
30	F	5	C
35	X	4	Q,C
40	N	7	Q
45	Y	6	L
50	T	9	F,L
55	J	3	X,F,N
60	S	6	N,X
65	V	10	Y,T,J
70	U	8	V,S

Solution 4.1

SUC	A	B	C	Q	M	L	X	N	Z	S	J	T	V	Q1	
DUR	4	5	3	8	1	8	2	7	8	8	6	4	10	6	
ESD	0	4	4	4	9	12	12	12	20	20	20	19	28	38	EFD
FF	0	0	0	0											A
		---	---	---											4
TF	0	3	5	0											
	FF	0			0	3									B
					---	---									9
	TF	3			10	3									
		FF	2		2	5	5								C
					---	---	---								7
		TF	5		12	5	13								
			FF	0		0	0	0							Q
						---	---	---							12
			TF	0		0	8	15							
				FF	10				10	10					M
									---	---					10
				TF	10				10	10					
					FF	0			0	0	0				L
						---			---	---	---				20
					TF	0			0	0	2				
						FF	6				6				X
											---				14
						TF	8				8				
							FF	0				0			N
												---			19
							TF	15				15			
								FF	0				0		Z
									---				---		28
								TF	0				0		
									FF	0			0		S
										---			---		28
									TF	0			0		
										FF	2		2		J
											---		---		26
										TF	2		2		
											FF	15		15	T
												---		---	23
											TF	15		15	
												FF	0	0	V
														---	38
												TF	0	0	
													FF	0	Q1
															44
													TF	0	

Solution 4.2

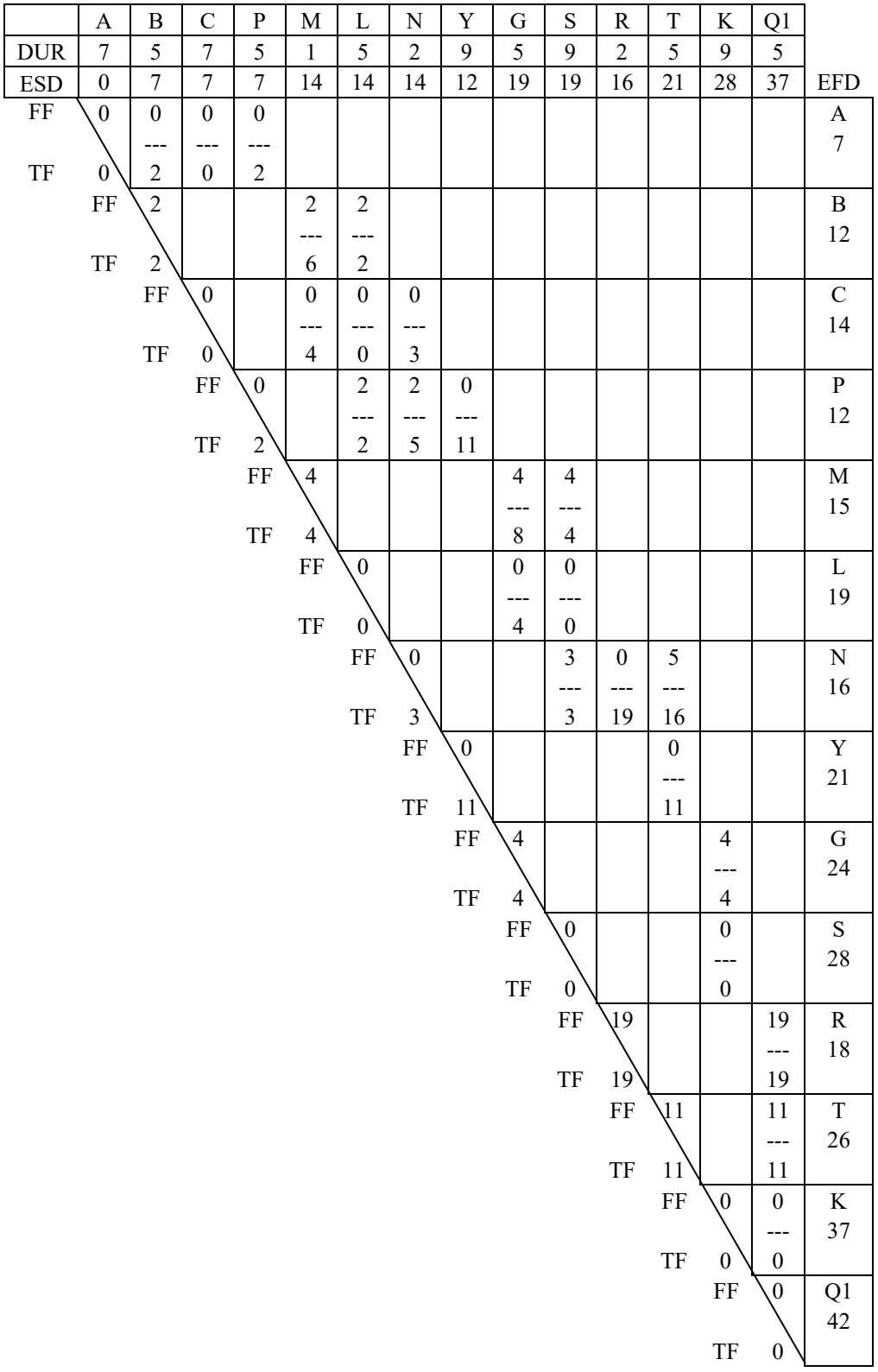
A B C P M L N Y G S R T K Q1
DUR 7 5 7 5 1 5 2 9 5 9 2 5 9 5
ESD 0 7 7 7 14 14 14 12 19 19 16 21 28 37 EFD
FF 0 0 0 0 A
--- --- --- 7
TF 0 2 0 2
FF 2 2 2 B
--- --- 12
TF 2 6 2
FF 0 0 0 0 C
--- --- --- 14
TF 0 4 0 3
FF 0 2 2 0 P
--- --- --- 12
TF 2 2 5 11
FF 4 4 4 M
--- --- 15
TF 4 8 4
FF 0 0 0 L
--- --- 19
TF 0 4 0
FF 0 3 0 5 N
--- --- --- 16
TF 3 3 19 16
FF 0 0 Y
--- 21
TF 11 11
FF 4 4 G
--- 24
TF 4 4
FF 0 0 S
--- 28
TF 0 0
FF 19 19 R
--- 18
TF 19 19
FF 11 11 T
--- 26
TF 11 11
FF 0 0 0 K
--- 37
TF 0 0
FF 0 Q1
42
TF 0

Solution 4.3

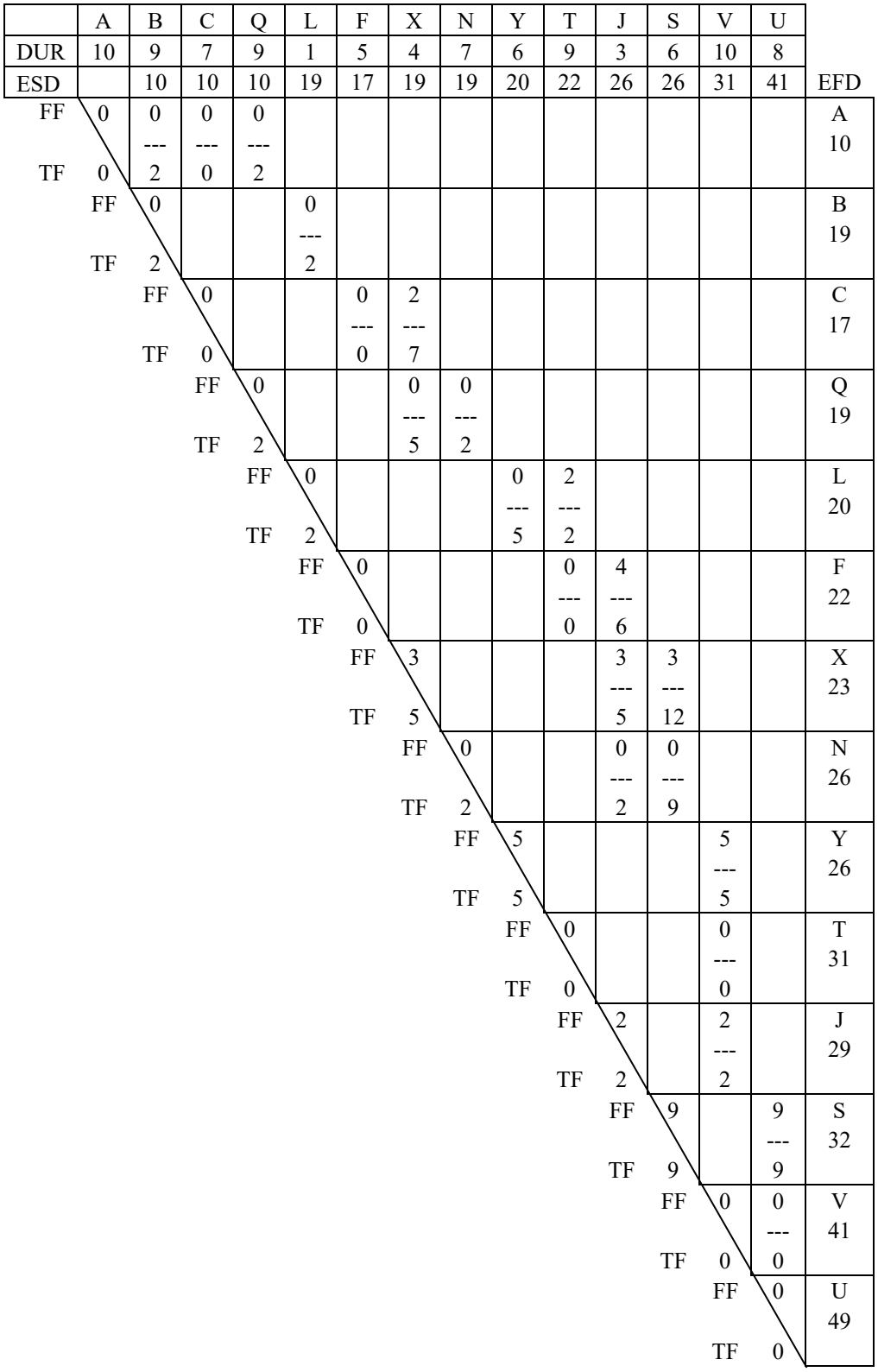

	A	B	C	Q	L	F	X	N	Y	T	J	S	V	U	
DUR	10	9	7	9	1	5	4	7	6	9	3	6	10	8	
ESD		10	10	10	19	17	19	19	20	22	26	26	31	41	EFD
FF	0	0	0	0											A
		---	---	---											10
TF	0	2	0	2											
FF	0			0											B
				---											19
TF	2			2											
FF	0			0	2										C
				---	---										17
TF	0			0	7										
FF	0			0	0										Q
				---	---										19
TF	2			5	2										
FF	0			0	2				0	2					L
				---	---				---	---					20
TF	2			5	2				5	2					
FF	0			0	2				0	0	4				F
				---	---				---	---	---				22
TF	0			0	2				0	0	6				
FF	3			3	2				3	3	3				X
				---	---				---	---	---				23
TF	5			5	2				5	12	5				
FF	0			0	2				0	0	0				N
				---	---				---	---	---				26
TF	2			5	2				5	9	2				
FF	5			5	2				5	5	5				Y
				---	---				---	---	---				26
TF	5			5	2				5	5	5				
FF	0			0	2				0	0	0				T
				---	---				---	---	---				31
TF	0			5	2				5	5	5				
FF	2			5	2				5	5	5				J
				---	---				---	---	---				29
TF	2			5	2				5	5	5				
FF	9			9	2				9	9	9	9		9	S
				---	---				---	---	---	---		---	32
TF	9			9	2				9	9	9	9		9	
FF	0			0	2				0	0	0	0	0	0	V
				---	---				---	---	---	---	---	---	41
TF	0			5	2				5	5	5	5	5	0	
FF	0			0	2				0	0	0	0	0	0	U
				---	---				---	---	---	---	---	---	49
TF	0			5	2				5	5	5	5	5	0	

5. PROJECT UPDATING

Project Updating

Original Target Schedule

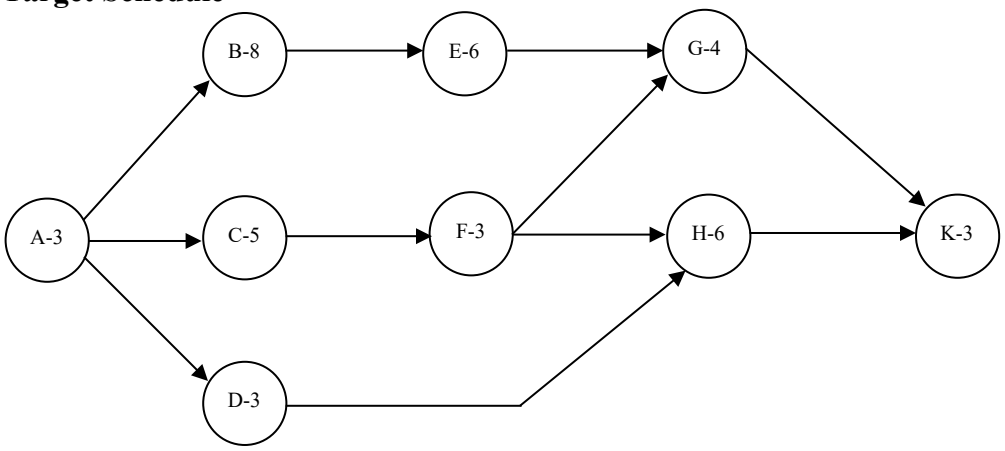

Update Information at data date = 10.

1. Activity D takes 6 days to finish.
2. Activity F takes 5 more days to complete.
3. It is expected that it will take total 15 days to finish activity B.
4. Activity H cannot start until date 17 because of the delay of material.

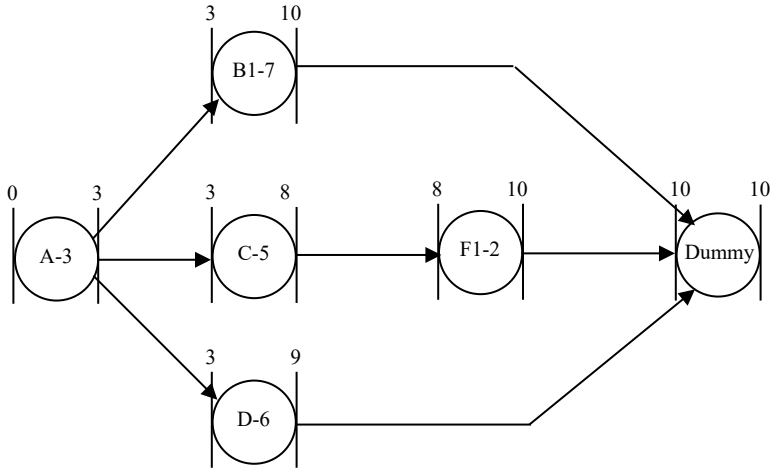

Please study these two networks and pay attention to on-processing activities (B and F).

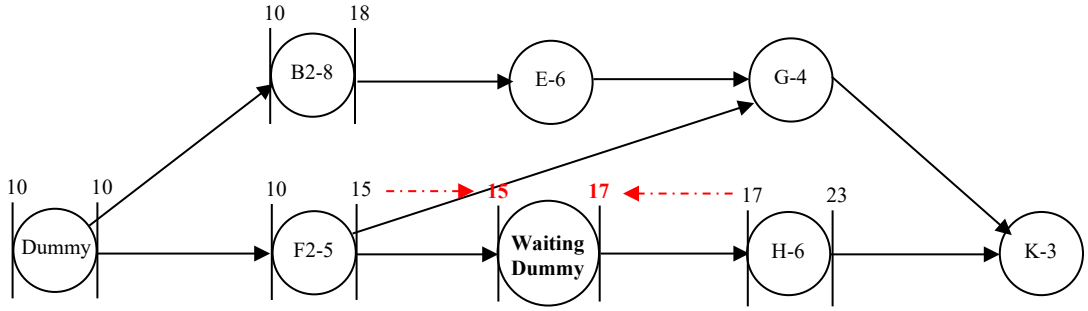

6. PERT—PNET

6. Probabilistic Scheduling using PERT and PNET

Problem 6.1 Probabilistic scheduling using PERT and PNET methods

1.) Set up a table and calculate Early Event Times (TE), Late Event Times (TL), Activity Free Slack (AFS), and Activity Total Slack (ATS).
2.) Determine the PERT "critical path(s)" and the mean and standard deviation for the project duration.
3.) Use PNET method to find the project durations and their corresponding probabilities of project completion from 0 to 100%.

i	j	Act	a	M	b
5	10	A	5	7	9.5
5	15	B	4.5	5	7
5	20	C	6	8	10.5
5	25	D	4	6	7.5
10	30	E	2.5	3.5	5
10	35	F	4	6	8
15	35	G	6.5	8	11
15	45	H	4	5	7
20	40	I	2.5	3.25	4.5
20	45	J	4	6	7
25	45	K	2.5	4	5.5
30	50	L	1	2	3
35	50	M	3.5	4.25	5.5
40	50	N	4	6	8
45	55	O	4.5	5	7
50	55	Z	4	6	9

Problem 6.2 Probabilistic scheduling using PERT and PNET methods

1.) Set up a table and calculate Early Event Times (TE), Late Event Times (TL), Activity Free Slack (AFS), and Activity Total Slack (ATS).
2.) Determine the PERT "critical path(s)" and the mean and standard deviation for the project duration.
3.) Use PNET method to find the project durations and their corresponding probabilities of project completion from 0 to 100%.

i	j	Act	a	M	b
5	10	A	2	4	6.5
5	15	B	6	7	7.5
5	30	C	1	2	5.5
10	20	Y	2.5	4.5	5.5
10	25	U	5	6	7
15	30	I	3	4	7.5
20	35	O	2.5	5.5	8
25	35	P	2	3	5
25	40	L	3	4	4
30	45	K	1	2	3.5
35	50	J	5	6.5	8
40	50	H	4	5	6.5
45	55	G	2	3	5
50	60	F	6.5	7.5	9.5
55	60	D	3.5	5	7
60	65	S	3	4	4.5

Problem 6.3 Probabilistic scheduling using PERT and PNET methods

1.) Set up a table and calculate Early Event Times (TE), Late Event Times (TL), Activity Free Slack (AFS), and Activity Total Slack (ATS).
2.) Determine the PERT "critical path(s)" and the mean and standard deviation for the project duration.
3.) Use PNET method to find the project durations and their corresponding probabilities of project completion from 0 to 100%.

i	j	Act	a	M	b
5	10	S	3.00	5.00	9.00
5	15	U	5.00	6.00	8.00
10	20	P	5.00	6.00	7.00
10	25	E	3.00	4.00	7.00
15	25	R	0.00	0.00	0.00
15	30	W	4.00	7.00	9.00
20	35	O	2.00	3.00	4.00
25	35	M	4.00	6.00	11.00
30	35	A	0.00	0.00	0.00
30	40	N	5.00	6.00	9.00
35	45	X	1.00	3.00	5.00
40	45	Y	3.00	6.00	7.00

Solution 6.1

Step 1. Calculate E[ti], SD[ti], and Var[ti].

Table 1. Activity Properties

i	j	Act	a	M	b	$E[t_{ij}]$	$SD[t_{ij}]$	$Var[t_{ij}]$	TEi	TEi+E[ti]	TLi-E[ti]	TLj	ATS	AFS
5	10	A	5.00	7.00	9.50	7.08	0.75	0.56	0	7.08	0.42	7.5	0.42	0
5	15	B	4.50	5.00	7.00	5.25	0.42	0.18	0	5.25	0	5.25	0	0
5	20	C	6.00	8.00	10.50	8.08	0.75	0.56	0	8.08	0.42	8.5	0.42	0
5	25	D	4.00	6.00	7.50	5.92	0.58	0.34	0	5.92	8.83	14.75	8.83	0
10	30	E	2.50	3.50	5.00	3.58	0.42	0.18	7.08	10.66	12.25	15.83	5.17	0
10	35	F	4.00	6.00	8.00	6	0.67	0.45	7.08	13.08	7.5	13.5	0.42	0.42
15	35	G	6.50	8.00	11.00	8.25	0.75	0.56	5.25	13.5	5.25	13.5	0	0
15	45	H	4.00	5.00	7.00	5.17	0.5	0.25	5.25	10.42	13.58	18.75	8.33	3.49
20	40	I	2.50	3.25	4.50	3.33	0.33	0.11	8.08	11.41	8.5	11.83	0.42	0
20	45	J	4.00	6.00	7.00	5.83	0.5	0.25	8.08	13.91	12.92	18.75	4.84	0
25	45	K	2.50	4.00	5.50	4	0.5	0.25	5.92	9.92	14.75	18.75	8.83	3.99
30	50	L	1.00	2.00	3.00	2	0.33	0.11	10.66	12.66	15.83	17.83	5.17	5.17
35	50	M	3.50	4.25	5.50	4.33	0.33	0.11	13.5	17.83	13.5	17.83	0	0
40	50	N	4.00	6.00	8.00	6	0.67	0.45	11.41	17.41	11.83	17.83	0.42	0.42
45	55	O	4.50	5.00	7.00	5.25	0.42	0.18	13.91	19.16	18.75	24	4.84	4.84
50	55	Z	4.00	6.00	9.00	6.17	0.83	0.69	17.83	24	17.83	24	0	0

$E[ti] = (a+4M+b)/6$

$SD[ti] = (b-a)/6 \Rightarrow Var[ti] = SD[ti]^2$

Step 2. Determine all possible paths and calculate their E[T], Var[T], and SD[T]

Table 2. Path Properties

i	path	E[Ti]	Var[Ti]	SD[Ti]	E[Ti] -3SD[Ti]	E[Ti] +3SD[Ti]
1	5 - 15 - 35 - 50 - 55	24.00	1.54	1.24	20.28	27.72
2	5 - 20 - 40 - 50 - 55	23.58	1.81	1.35	19.53	27.63
3	5 - 10 - 35 - 50 - 55	23.58	1.81	1.35	19.53	27.63
4	5 - 20 - 45 - 55	19.16	0.99	0.99	16.19	22.13
5	5 - 10 - 30 - 50 - 55	18.83	1.54	1.24	15.11	22.55
6	5 - 15 - 45 - 55	15.67	0.61	0.78	13.33	18.01
7	5 - 25 - 45 - 55	15.17	0.77	0.88	12.53	17.81
		24.00			20.28	27.72

Example: Path 1 consists of activities 5-15, 15-35, 35-50, and 50-55.

Activity =>	5-15	15-35	35-50	50-55	
E[ti]	5.25	8.25	4.33	6.17	**$E[T_1] = 24$**
Var[ti]	0.18	0.56	0.11	0.69	**$Var[T_1] = 1.54$**

Thus, $SD[T_1]$ of path1 is $1.54^{0.5} = 1.24$

NOTE:

1. Do not add SD[ti] of activities to get SD[T] of a path. Path SD[T] must be derived from a square root of the summation of Var[ti] of activities in the path.
2. Path 6 and 7 can be neglected because their E[Ti]+3SD[Ti], which are 18.01 and 17.81, are relatively short compared to the maximum E[T]-3SD[T], which is 20.28.
3. Paths in Table 2 must be sorted by E[T] before constructing Table 3, otherwise you might represent a longer path by a shorter one.

Step 3. Calculate correlation between paths

Table 3. Correlations between paths

r 1 2 Pij	0.41
r 1 3 Pij	0.48
r 1 4 Pij	0
r 1 5 Pij	0.45
r 1 6 Pij	0.18
r 1 7 Pij	0
r 2 3 Pij	0.38
r 2 4 Pij	0.42
r 2 5 Pij	0.41
r 2 6 Pij	0
r 2 7 Pij	0
r 3 4 Pij	0
r 3 5 Pij	**0.75**
r 3 6 Pij	0
r 3 7 Pij	0
r 4 6 Pij	0.23
r 4 7 Pij	0.2
r 6 7 Pij	0.26

Correlation greater than 0.5, thus eliminate path 5

$$\rho_{ij} = \frac{\sum_{k\in(\pi_i\cap\pi_j)} \sigma_k^2}{\sigma_{Ti}\sigma_{Tj}}$$

ρ_{ij} is the correlation between path i and j.

$k \in (\pi_i \cap \pi_j)$ are activities that are in both path i and j.

σ_{Ti} is standard deviation of path i, SD[Ti]

σ_{Tj} is standard deviation of path j, SD[Tj]

Example: Path 1 and 2 have activities 50-55 in common (its SD[ti] is 0.83), and their SD[T] are 1.24 and 1.35. Thus,

$$\rho_{ij} = \frac{\sum_{k\in(\pi_i\cap\pi_j)} \sigma_k^2}{\sigma_{Ti}\sigma_{Tj}} = \rho_{12} = \frac{0.83^2}{1.24\times 1.35} = 0.412$$

NOTE:

1. Paths in Table 2 must be sorted by E[T] before constructing Table 3, otherwise you might represent a longer path by shorter one.
2. Path 5 is represented by path 3. (A shorter path with high correlation to a longer path is represented by the longer one, NOT the other way around)

Step 4. Calculate probabilities of project completion

Table 4. Probability of Project Completion

T	1 (PERT)	2	3	4	6	7	all combine (PNET)
19	0.000	0.000	0.000	0.436	1.000	1.000	0.000
20	0.001	0.004	0.004	0.802	1.000	1.000	0.000
21	0.008	0.028	0.028	0.968	1.000	1.000	0.000
22	0.053	0.121	0.121	0.998	1.000	1.000	0.001
23	0.210	0.334	0.334	1.000	1.000	1.000	0.023
24	0.500	0.622	0.622	1.000	1.000	1.000	0.194
25	0.790	0.854	0.854	1.000	1.000	1.000	0.576
26	0.947	0.963	0.963	1.000	1.000	1.000	0.879
27	0.992	0.994	0.994	1.000	1.000	1.000	0.981
28	0.999	0.999	0.999	1.000	1.000	1.000	0.998
29	1.000	1.000	1.000	1.000	1.000	1.000	1.000

$$F_i(x) = Fu\left(\frac{x - E[Ti]}{\sigma_i}\right)$$

Example:

Probability of finishing the project less **than 26 days** according to path 1 is $F_1(26) = Fu\left(\frac{26-24}{1.24}\right) = Fu(1.61) = 0.946$

Probability of finishing the project less than 19 days according to path 1 is

$F_1(19) = Fu\left(\frac{19-24}{1.24}\right) = Fu(-4) = 1 - Fu(4) = 1 - 0.99997 \approx 0$

Probability of finishing the project **greater that 26 days** is 1-F_1(26) = 1- 0.946 = 0.54

NOTE:
As shown in Table 4, path 6 and 7 can be ignored since their E[Ti]+3SD[Ti] (from Table 2), which are 18.01 and 17.81 respectively,are less than the maximum E[Ti]-3SD[Ti], 20.28. In Table 4, agreeing to Table 2, probabilities of path 6 and 7 are all equal to 1.

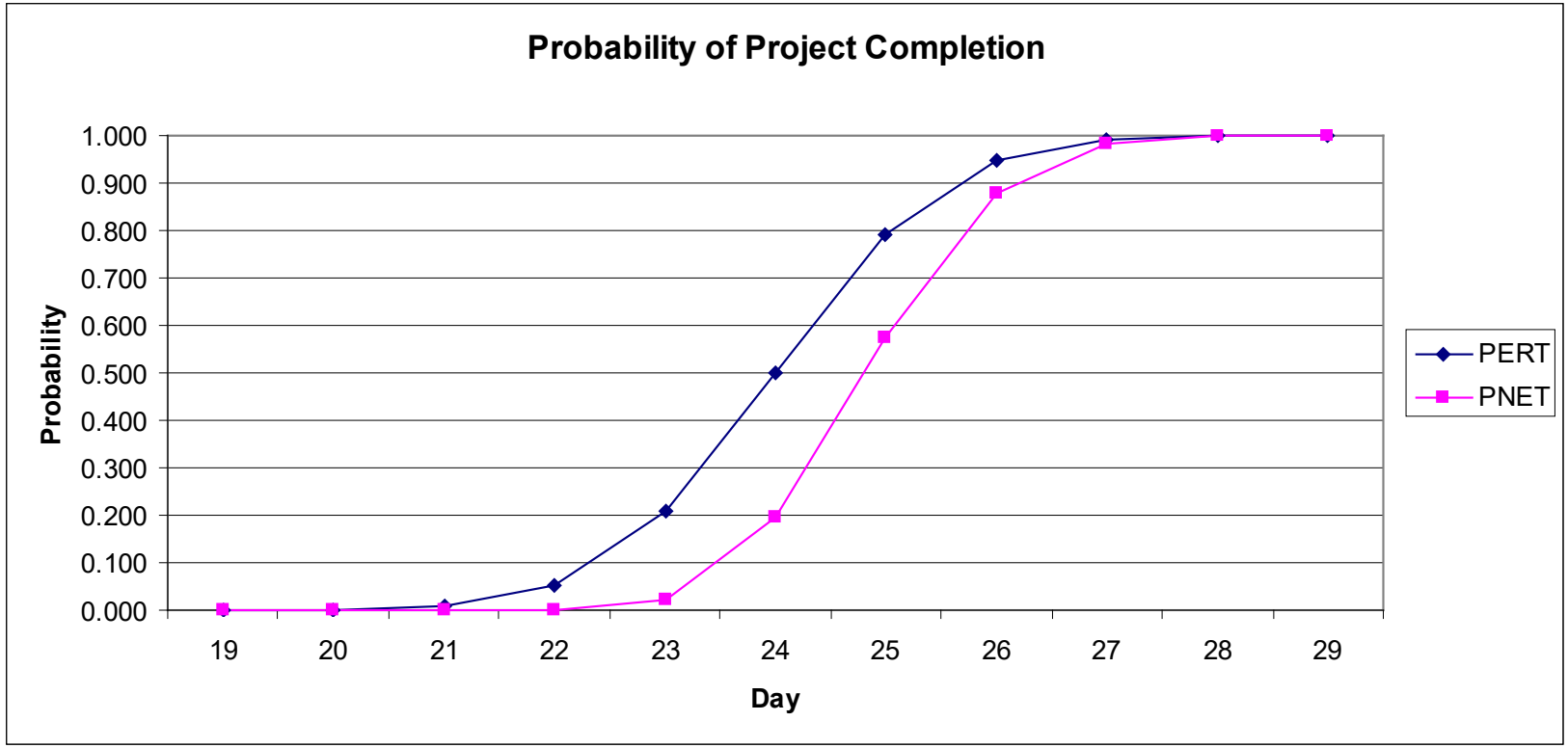
Probability of Project Completion
Probability
1.000
0.900
0.800
0.700
0.600
0.500
0.400
0.300
0.200
0.100
0.000
19
20
21
22
23
24
25
26
27
28
29
Day
PERT
PNET

Solution 6.2
Step 1. Calculate E[ti], SD[ti], and Var[ti].

Table 1. Activity Properties

i	j	Act	a	M	b	E[t_{ij}]	SD[t_{ij}]	Var[t_{ij}]	TEi	TEi+E[ti]	TLi-E[ti]	TLj	ATS	AFS
5	10	A	2	4	6.5	4.08	0.75	0.56	0	4.08	0.00	4.08	0.00	0.00
5	15	B	6	7	7.5	6.92	0.25	0.06	0	6.92	6.33	13.25	6.33	0.00
5	30	C	1	2	5.5	2.42	0.75	0.56	0	2.42	15.25	17.67	15.25	8.92
10	20	Y	2.5	4.5	5.5	4.33	0.50	0.25	4.08	8.42	4.08	8.42	0.00	0
10	25	U	5	6	7	6.00	0.33	0.11	4.08	10.08	4.67	10.67	0.58	0
15	30	I	3	4	7.5	4.42	0.75	0.56	6.92	11.33	13.25	17.67	6.33	0
20	35	O	2.5	5.5	8	5.42	0.92	0.84	8.42	13.83	8.42	13.83	0.00	0
25	35	P	2	3	5	3.17	0.50	0.25	10.08	13.25	10.67	13.83	0.58	0.58
25	40	L	3	4	4	3.83	0.17	0.03	10.08	13.92	11.42	15.25	1.33	0
30	45	K	1	2	3.5	2.08	0.42	0.17	11.33	13.42	17.67	19.75	6.33	0
35	50	J	5	6.5	8	6.50	0.50	0.25	13.83	20.33	13.83	20.33	0.00	0
40	50	H	4	5	6.5	5.08	0.42	0.17	13.92	19.00	15.25	20.33	1.33	1.33
45	55	G	2	3	5	3.17	0.50	0.25	13.42	16.58	19.75	22.92	6.33	0
50	60	F	6.5	7.5	9.5	7.67	0.50	0.25	20.33	28.00	20.33	28.00	0.00	0
55	60	D	3.5	5	7	5.08	0.58	0.34	16.58	21.67	22.92	28.00	6.33	6.33
60	65	S	3	4	4.5	3.92	0.25	0.06	28.00	31.92	28.00	31.92	0.00	0

Step 2. Determine all possible paths and calculate their E[T], Var[T], and SD[T]

Table 2. Path Properties

i	path	E[Ti]	Var[Ti]	SD[Ti]	E[Ti]	
					-3SD[Ti]	+3SD[Ti]
1	5 - 10 - 20 - 35 - 50 - 60 - 65	31.92	2.22	1.49	27.45	36.38
2	5 - 10 - 25 - 35 - 50 - 60 - 65	31.33	1.49	1.22	27.68	34.99
3	5 - 10 - 25 - 40 - 50 - 60 - 65	30.58	1.19	1.09	27.31	33.85
4	5 - 15 - 30 - 45 - 55 - 60 - 65	25.58	1.45	1.20	21.97	29.20
5	5 - 30 - 45 - 55 - 60 - 65	16.67	1.39	1.18	13.13	20.20

Step 3. Calculate correlation between paths

Table 3. Correlations between paths

$\rho_{1,2}$	0.62
$\rho_{1,3}$	0.54
$\rho_{1,4}$	0.03
$\rho_{1,5}$	0.04
$\rho_{3,4}$	0.05
$\rho_{3,5}$	0.05
$\rho_{4,5}$	0.58

Step 4. Calculate probabilities of project completion

Table 4. Probability of Project Completion

t	**P[T_1<t] (PERT)**	**P[T_3<t]**	**P[T_4<t]**	**All paths combined (PNET)**
26	0.000	0.000	0.635	0.000
27	0.000	0.001	0.880	0.000
28	0.004	0.009	0.978	0.000
29	0.025	0.073	0.998	0.002
30	0.099	0.296	1.000	0.029
31	0.269	0.649	1.000	0.175
32	0.522	0.903	1.000	0.472
33	0.767	0.987	1.000	0.756
34	0.919	0.999	1.000	0.918
35	0.981	1.000	1.000	0.981
36	0.997	1.000	1.000	0.997
37	1.000	1.000	1.000	1.000
38	1.000	1.000	1.000	1.000

Problem 6.3

Table 1.

i	j	Act	a	M	b	$E[t_{ij}]$	$SD[t_{ij}]$	$Var[t_{ij}]$	TEi	TEi+E[ti]	TLi-E[ti]	TLj	ATS	AFS
5	10	S	3.00	5.00	9.00	5.33	1	1	0	5.33	5.84	11.17	5.84	0
5	15	U	5.00	6.00	8.00	6.17	0.5	0.25	0	6.17	0	6.17	0	0
10	20	P	5.00	6.00	7.00	6	0.33	0.11	5.33	11.33	13	19	7.67	0
10	25	E	3.00	4.00	7.00	4.33	0.67	0.45	5.33	9.66	11.17	15.5	5.84	0
15	25	R	0.00	0.00	0.00	0	0	0	6.17	6.17	15.5	15.5	9.33	3.49
15	30	W	4.00	7.00	9.00	6.83	0.83	0.69	6.17	13	6.17	13	0	0
20	35	O	2.00	3.00	4.00	3	0.33	0.11	11.33	14.33	19	22	7.67	1.83
25	35	M	4.00	6.00	11.00	6.5	1.17	1.37	9.66	16.16	15.5	22	5.84	0
30	35	A	0.00	0.00	0.00	0	0	0	13	13	22	22	9	3.16
30	40	N	5.00	6.00	9.00	6.33	0.67	0.45	13	19.33	13	19.33	0	0
35	45	X	1.00	3.00	5.00	3	0.67	0.45	16.16	19.16	22	25	5.84	5.84
40	45	Y	3.00	6.00	7.00	5.67	0.67	0.45	19.33	25	19.33	25	0	0

Table 2.

i	PATH	E[Ti]	Var[Ti]	SD[Ti]	E[Ti]	
					-3SD[Ti]	+3SD[Ti]
1	5 - 15 - 30 - 40 - 45	25.00	1.84	1.36	20.92	29.08
2	5 - 10 - 25 - 35 - 45	19.16	3.27	1.81	13.73	24.59
3	5 - 10 - 20 - 35 - 45	17.33	1.67	1.29	13.46	21.20
4*	5 - 15 - 30 - 35 - 45	16.00	1.39	1.18	12.46	19.54
5*	5 - 15 - 25 - 35 - 45	15.67	2.07	1.44	11.35	19.99
		25.00			20.92	29.08

NOTE:

1. Data in Table 2 must be sorted by E[T] before constructing Table 3, otherwise you might try to represent a longer path by shorter one.
2. Path 4 and 5 can be ignored since their E[Ti]+3SD[Ti], which are 19.54 and 19.99 respectively,are less than the maximum E[Ti]-3SD[Ti], 20.92.

Table 3.

r 1 2 Pij	0.00
r 1 3 Pij	0.00
r 1 4 Pij	0.59
r 1 5 Pij	0.13
r 2 3 Pij	0.62
r 2 5 Pij	0.70

Table 4.

T	**1 (PERT)**	**2**	**all combine (PNET)**
20	0.000	0.679	0.000
21	0.002	0.845	0.001
22	0.014	0.942	0.013
23	0.071	0.983	0.070
24	0.231	0.996	0.230
25	0.500	0.999	0.500
26	0.769	1.000	0.769
27	0.929	1.000	0.929
28	0.986	1.000	0.986
29	0.998	1.000	0.998
30	1.000	1.000	1.000

NOTE:
Path 4 can be represented by path 1, and also path 3 can be represented by path 2. (A shorter path with high correlation to a longer path is represented by the longer one, NOT the other way around)

7. TIME-COST TRADEOFF TABLES

Time-Cost Tradeoff

The following is a basic idea about Time-Cost Tradeoff. Read it carefully and think along the way will give you an insight idea about this subject.

If the minimum duration of B is 1 day (TC=1), and cost of shortening its duration is $200 per 1 shortened day, how many days will you shorten activity B?

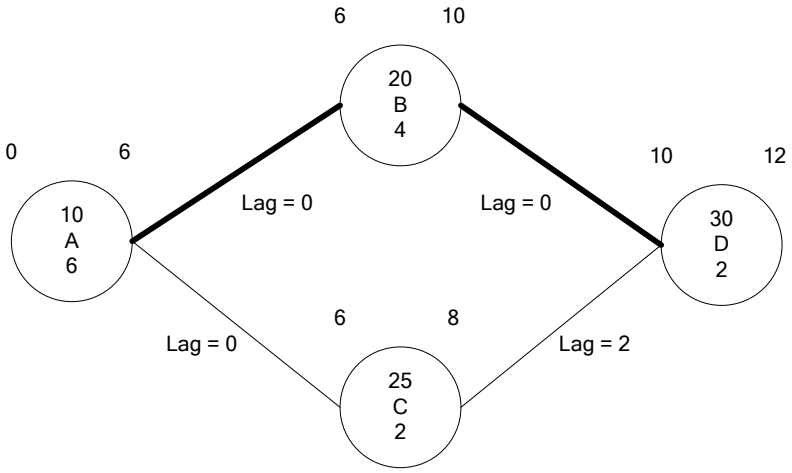

1) Shortening activity B by 1 day costs $200 and reduces project duration to 11 days.

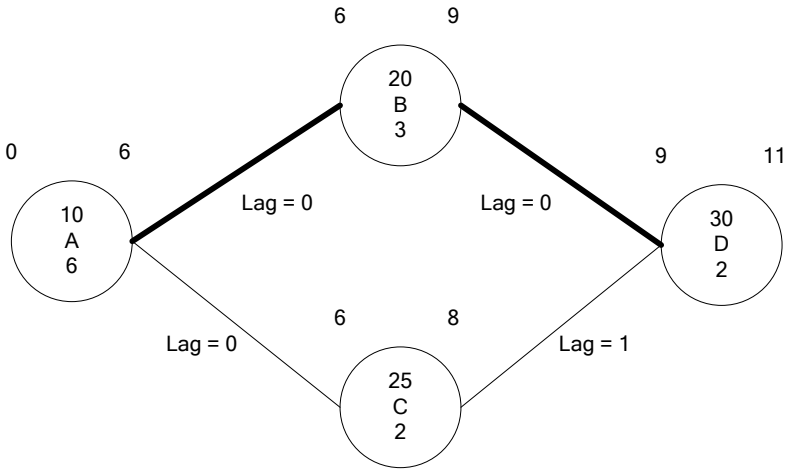

2) Shortening activity B by 2 days costs $400 and reduces project duration to 10 days.

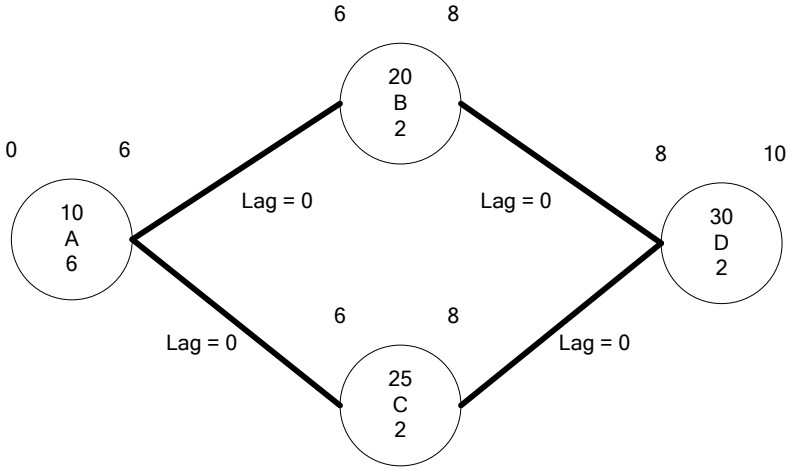

As shown in the case of shortening B by 2 days, one of the lags, between C and D, becomes 0, because shortening B allows D to start earlier. As a result, the network now has 2 critical paths. Accordingly, shortening activity B alone from this point does not reduce project duration because another critical path A-C-D still control the project duration (10 days). So, if you want to shorten B beyond this point, you have to shorten activity C as well.

It should be noted that when one of the lags becomes 0 due to shortening an activity, it is not necessary that the new 0 lag link will incur a new critical path. However, it is a good practice to stop shortening an activity at the point when one of the lags becomes 0, because we do not know whether there is a new critical path or not.

3) Shorten activity B by 3 days costs $600 and project duration is still the same as shortening B by 2 days.

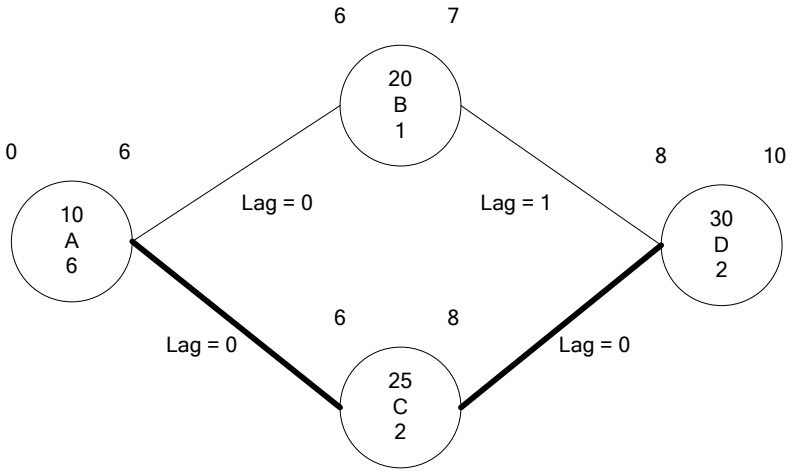

What happens here is after shorten B by 2 days, path A-B-D and path A-C-D become critical paths. Shortening B further (the 3rd day) cannot reduce project duration because ANOTHER CRITICAL PATH (A-C-D) still dominates the project duration. This means the $200 that is spent on the 3rd shortened day is wasted, since we do not gain any reduction in project duration from the last $200.

2) What will you do if you have the following options? And in which orders?

- Activity A can be crashed to 3 days by paying extra $140 per 1 shorten day.
- Activity B can be crashed to 1 day by paying extra $110 per 1 shorten day.
- Activity C can be crashed to 3 days by paying extra $40 per 1 shorten day.
- Activity D can be crashed to 1 day by paying extra $20 per 1 shorten day.
- Activity E can be crashed to 1 day by paying extra $100 per 1 shorten day.

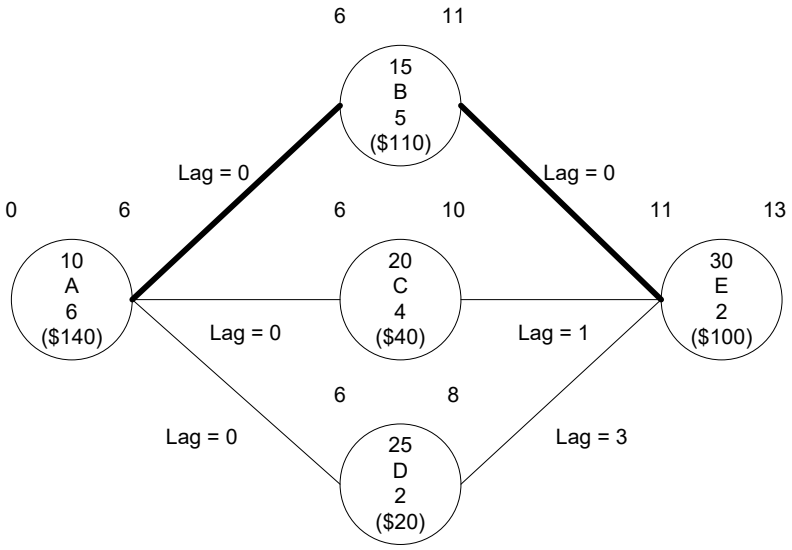

Procedure

First, select a critical activity with the cheapest $/shortened day. (If you don't know why we select a critical activity, I suggest you to read the BABY problem again. Please make sure you are sober this time.)

Second, shorten the selected activity until one of the lags in the network becomes 0.

Thus,

Step 1 (or Cycle 1)

Shorten E by 1 day. There is no change in lags. Project duration becomes 12 days.

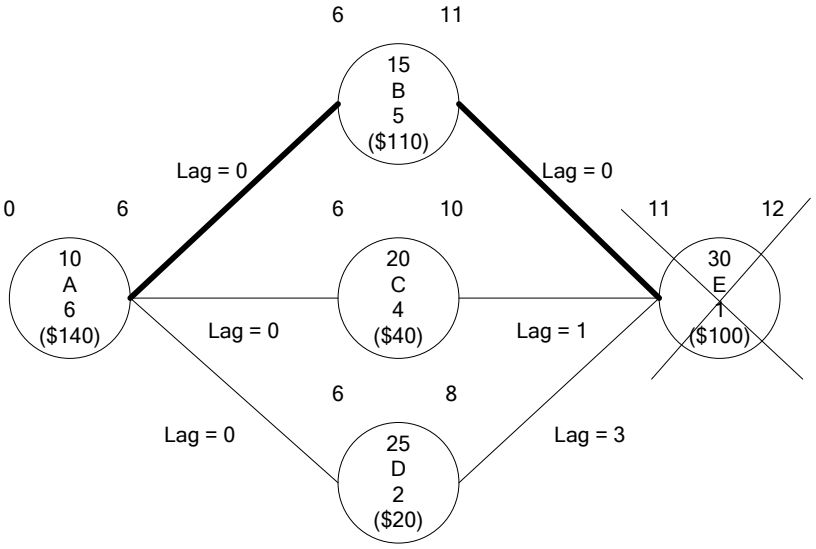

Step 2 (or Cycle 2)

Select activity B because it is a critical activity with the cheapest shortening cost ($110).

At this step, we will shorten B by 1 day only because lag C-E will become 0.

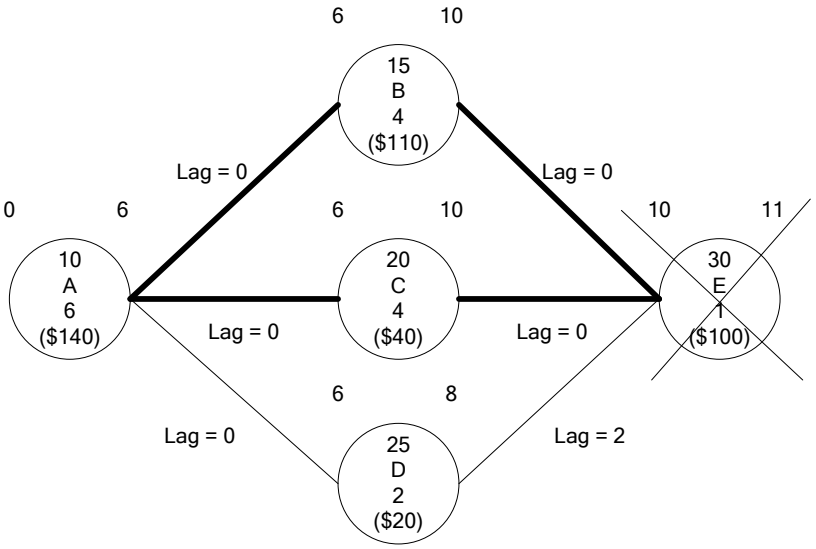

As shown in the figure above, after shorten B, the network now has 2 critical paths, A-B-E and A-C-E.

Step 3 (or Cycle 3)

At this step, we have 2 choices:

1) Shorten activity A alone for \$140/shortened day.

2) Shorten activities B and C together for \$110 + \$40 = \$150/shortened day.

If you shorten either B or C alone, you are going to waste your money because project duration will remain the same.

Thus, we choose the cheaper one between the two choices, which is shortening activity A by 3 days.

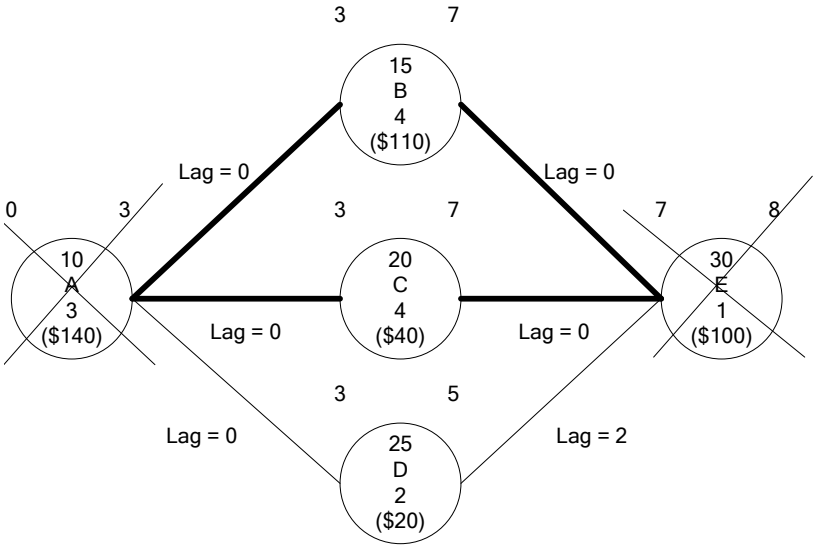

Step 4 (or cycle 4)

We have to shorten B and C at the same time. WHY???

Otherwise, project duration will still be the same, which means you spend more money on the project without gaining any reduction in project duration.

Network limit is 2 days. WHY???

Lag D-E will become 0.

Although network limit is 2 days, we can only shorten B and C by 1 day in this cycle. WHY???

TC of activity C is 3 days.

At this point, you have an idea about time-cost tradeoff. In the next section, we will talk about how to do this in a more systematic manner by using table.

Example from the previous problem by using table to check network limit and update lags. IMPORTANT: Column i refers to the finish date of activity, whereas column j refers to the start date of activity!!! (this is really important.)
I skip cycle 1 because it is easy. In cycle2, we decide to shorten activity B because it is the cheapest critical activity.

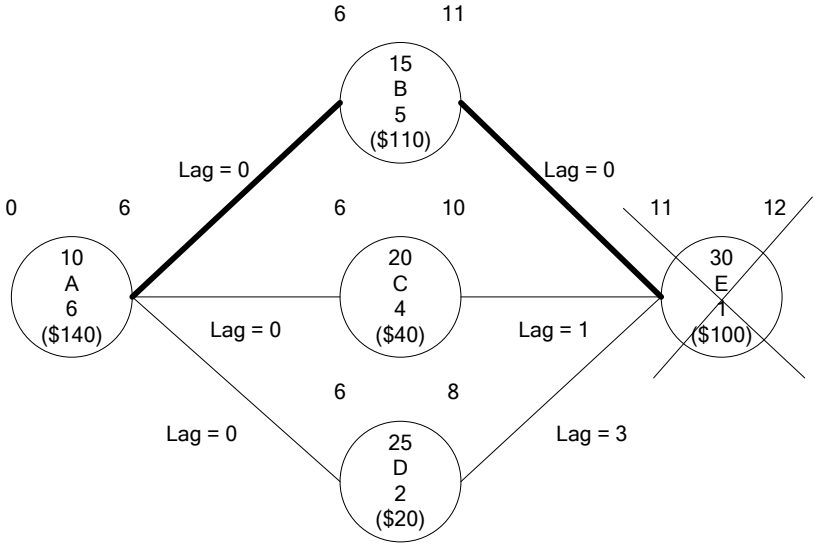

CYCLE			2.1			2.2			2.3		
ACTS Changed			B			B			B		
Network Limit									1		
Days Changed									1		
i	j	Lag	i	j	Lag	i	j	Lag	i	j	Lag
10	15	0									
10	20	0									
10	25	0									
15	30	0	<<			<<	<		<<	<	
20	30	1								<	0
25	30	3								<	2

In cycle 2.1, we identify the being shortened activity B by putting double arrow "<<" in this cycle 2.

In cycle 2.2, since the lag 15-30 is 0, we assume that finish date of B (or column i of B) controls the start date of E (or column j of E). Thus, shortening the finish date of B (or moving the finish date forward) will move the start date of E forward too!! Accordingly, we put an arrow for column j of E.

In cycle 2.3, since there are 3 cells in column j of E, which refers to the same thing (start date of E), we need to put an arrow for each one of them.

Now let's focus on one particular lag.
Part of the above table focus on lag 20-30 from cycle 2.3.

i	j	Lag	i	j	Lag	i	j	Lag	i	j	Lag
20	30	1								<	0

This unpaired arrow in cycle 2.3 on lag 20-30 means
1) The finish date of 20 will not be moved forward since there is no arrow in the column i of 20.
2) The start date of 30 (column j of 30) will be moved forward.
3) While keeping the finish date of 20 the same and moving the start date of 30 forward, we can only move start date of 30 forward by 1 day only because lag 20-30 will become 0. And this 1 day is the network limit for cycle 2.

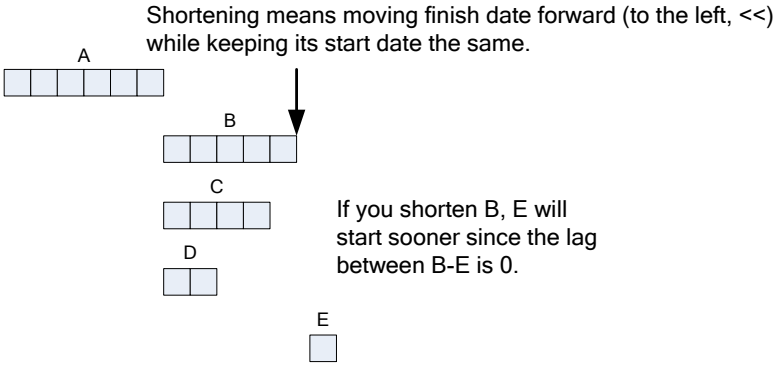

Let's see if you understand the underlying idea of the table and arrow.
What do these following parts of time-cost tradeoff table mean?

Lag	i	j
3	<	<

The finish date of activity i and the start date of activity j are moved forward for the same amount. Thus, the lag between them is still the same.

Lag	i	j
2	<	

The finish date of act i is moved forward while the start date of j is still the same. Thus, the lag will increase.

Lag	i	j
0		<

The start date of activity j is moved forward while the finish date of i is still the same. Since the lag between them is 0, this is IMPOSSIBLE. You have to CROSS the arrow for activity j out, indicating that it cannot be moved. We will talk about this again later in the following example.

SETUP TABLE

	ID	TC	TN	CC	CN	T
A	**10**	**2**	**4**	**600**	**300**	4
B	**20**	**1**	**2**	**800**	**650**	2
C	**30**	**3**	**5**	**480**	**240**	5
D	**40**	**1**	**3**	**300**	**100**	3
E	**50**	**2**	**4**	**1600**	**1000**	4
F	**60**	**1**	**2**	**1150**	**1100**	2
G	**70**	**2**	**3**	**500**	**300**	3
			sum	**5430**	**3690**	

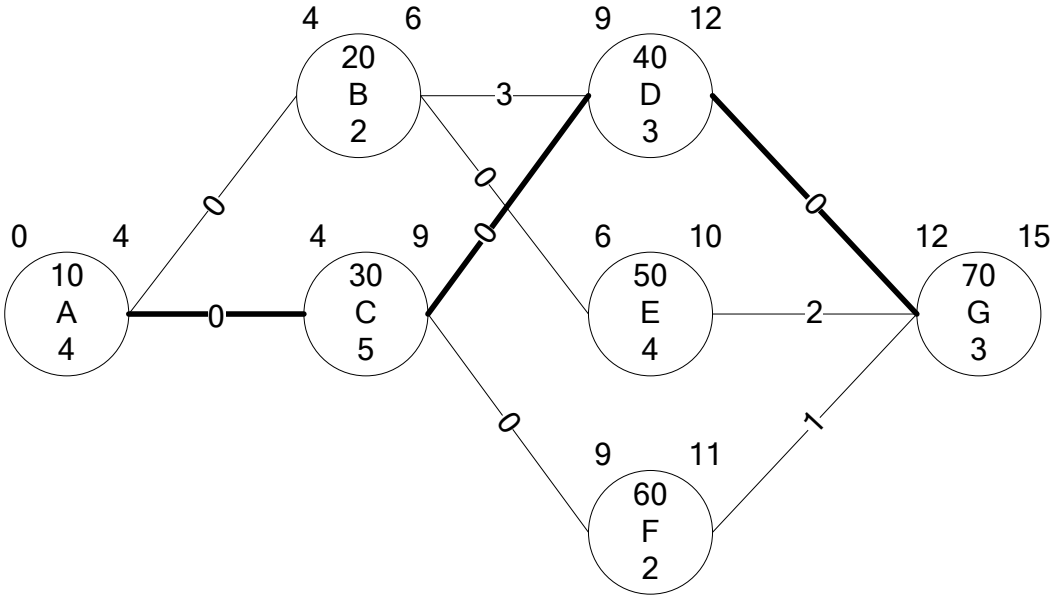

TALLY OF CRITICAL PATH

STEP	ACTIVITIES																					
1	10																					
2	20,30																					
3	40,50,60																					
4	70																					

ACTIVITY SELECTION AND TALLY TABLE

ACT	Slope																									
60	50																									
40	100																									
30	120																									
10	150																									
20	150																									
70	200																									
50	300																									

NETWORK LIMIT DETERMINATION TABLE

CYCLE																														
ACTS Changed																														
Network Limit																														
Days Changed																														
i	j	Lag																												
10	20	0																												
10	30	0																												
20	40	3																												
20	50	0																												
30	40	0																												
30	60	0																												
40	70	0																												
50	70	2																												
60	70	1																												

Cycle 1

	ID	TC	TN	CC	CN	T
A	**10**	**2**	**4**	**600**	**300**	4
B	**20**	**1**	**2**	**800**	**650**	2
C	**30**	**3**	**5**	**480**	**240**	5
D	**40**	**1**	**3**	**300**	**100**	3
E	**50**	**2**	**4**	**1600**	**1000**	4
F	**60**	**1**	**2**	**1150**	**1100**	2
G	**70**	**2**	**3**	**500**	**300**	3
			sum	**5430**	**3690**	

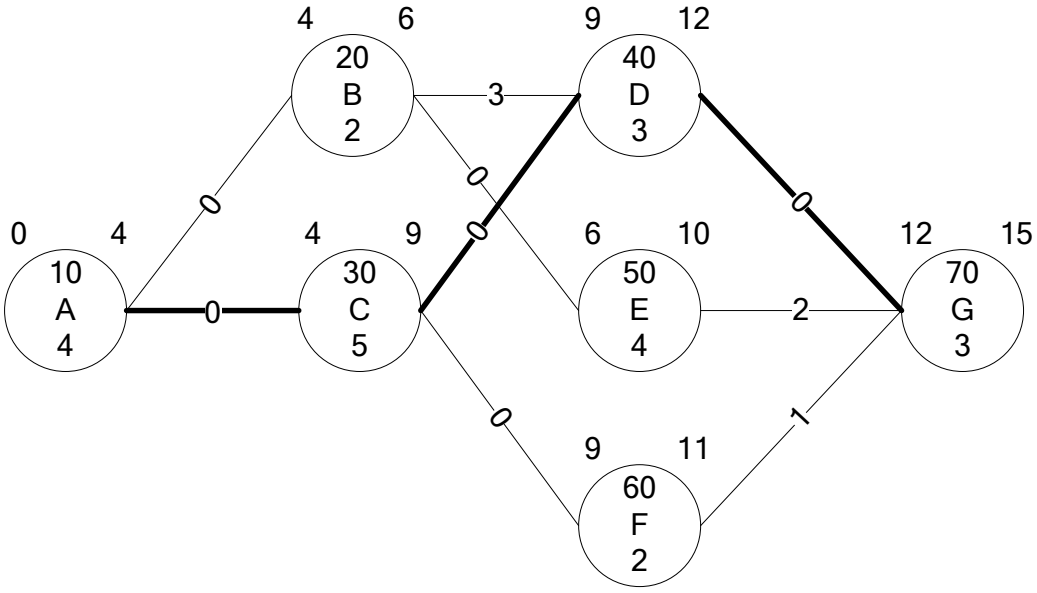

TALLY OF CRITICAL PATH

STEP	ACTIVITIES	0																				
1	10	10																				
2	20,30	30																				
3	40,50,60	40																				
4	70	70																				

ACTIVITY SELECTION AND TALLY TABLE

ACT	Slope	1	1	1	1
60	50				
40	100			**x**	
30	120		x		
10	150	x			
20	150				
70	200				x
50	300				
		300	240	**100**	200

NETWORK LIMIT DETERMINATION TABLE

CYCLE			1.1			1.2			1.3			1.4																				
ACTS Changed			40			40			40			40																				
Network Limit												1																				
Days Changed												1																				
i	**j**	**Lag**	**i**	**j**	**Lag**																										
10	**20**	**0**																													
10	**30**	**0**																													
20	**40**	**3**																													
20	**50**	**0**																													
30	**40**	**0**																													
30	**60**	**0**																													
40	**70**	**0**	<<			**<<**	**<**		<<	<		<<	<																		
50	**70**	**2**								<			<	**1**																	
60	**70**	**1**								<			**<**	**0**	**This is the network limit.**																

Cycle 2

	ID	TC	TN	CC	CN	T
A	**10**	**2**	**4**	**600**	**300**	4
B	**20**	**1**	**2**	**800**	**650**	2
C	**30**	**3**	**5**	**480**	**240**	5
D	**40**	**1**	**3**	**300**	**100**	**2**
E	**50**	**2**	**4**	**1600**	**1000**	4
F	**60**	**1**	**2**	**1150**	**1100**	2
G	**70**	**2**	**3**	**500**	**300**	3
			sum	**5430**	**3690**	**3790**
Current Project Cost =3690 + 100 = $3790 at 14 days with 2 critical paths						

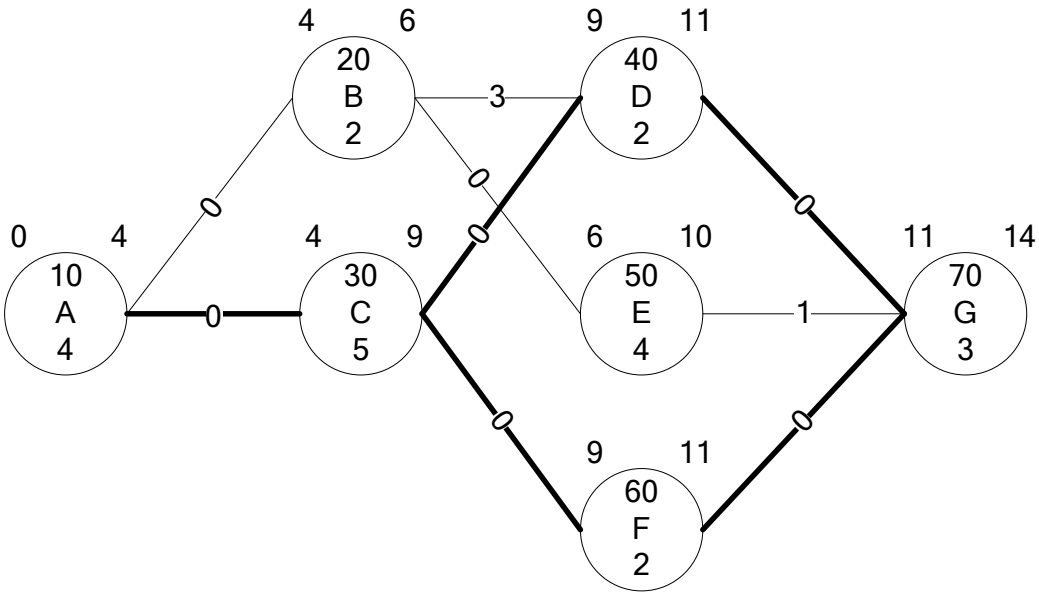

TALLY OF CRITICAL PATH

STEP	ACTIVITIES	0	1	1																		
1	10	10	10	10																		
2	20,30	30	30	30																		
3	40,50,60	40	40	60																		
4	70	70	70	70																		

ACTIVITY SELECTION AND TALLY TABLE

ACT	Slope	1	1	1	1	2	2	2	2																	
60	50					x																				
40	100			**x**		x																				
30	120		x				**x**																			
10	150	x						x																		
20	150																									
70	200				x				x																	
50	300																									
		300	240	**100**	200	150	**120**	150	200																	

NETWORK LIMIT DETERMINATION TABLE

CYCLE			1			2.1			2.2			2.3			2.4			2.5			2.6			2.7		
ACTS Changed			40			30			30			30			30			30			30			30		
Network Limit			1																					1		
Days Changed			1																					1		
i	**j**	**Lag**	**i**	**j**	**Lag**	**i**	**j**	**Lag**	**i**	**j**	**Lag**	**i**	**j**	**Lag**	**i**	**j**	**Lag**	**i**	**j**	**Lag**	**i**	**j**	**Lag**	**i**	**j**	**Lag**
10	**20**	**0**																								
10	**30**	**0**																								
20	**40**	**3**											<			<			<			<			<	**2**
20	**50**	**0**																								
30	**40**	**0**				<<			<<	<		<<	<		<<	<		<<	<		<<	<		<<	<	
30	**60**	**0**				<<			<<			<<			<<	<		<<	<		<<	<		<<	<	
40	**70**	**0**	<<	<								<			<			<			<	<		<	<	
50	**70**	**2**		<	**1**																				<	**0**
60	**70**	**1**		<	**0**													<			<			<	<	

Cycle 3

	ID	TC	TN	CC	CN	T
A	**10**	**2**	**4**	**600**	**300**	4
B	**20**	**1**	**2**	**800**	**650**	2
C	**30**	**3**	**5**	**480**	**240**	**4**
D	**40**	**1**	**3**	**300**	**100**	2
E	**50**	**2**	**4**	**1600**	**1000**	4
F	**60**	**1**	**2**	**1150**	**1100**	2
G	**70**	**2**	**3**	**500**	**300**	3
			sum	**5430**	**3690**	**3910**
Current Project Cost = 3790 + 120 = 3910 at 13 days with 3 critical paths						

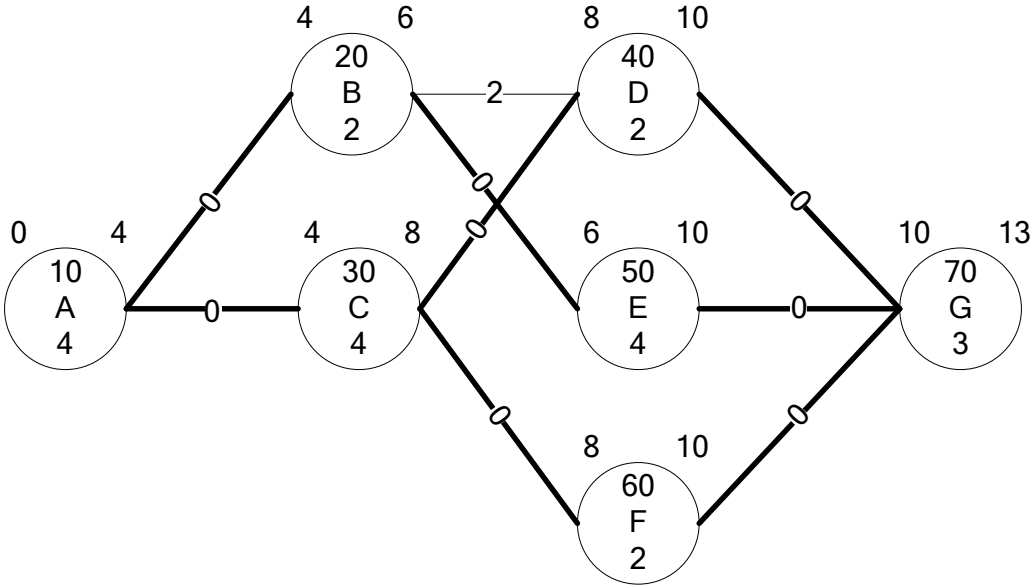

TALLY OF CRITICAL PATH

STEP	ACTIVITIES	0	1	1	2	2	2															
1	10	10	10	10	10	10	10															
2	20,30	30	30	30	30	30	20															
3	40,50,60	40	40	60	40	60	50															
4	70	70	70	70	70	70	70															

Combinations for cycle 3

1) Activity 10

10	**10**	**10**
30	30	20
40	60	50
70	70	70

2) Activities 20 and 30

10	10	10
30	**30**	**20**
40	60	50
70	70	70

3) Activities 40,50, and 60

10	10	10
30	30	20
40	**60**	**50**
70	70	70

4) Activity 70

10	10	10
30	30	20
40	60	50
70	**70**	**70**

5) Activities 30 and 50

10	10	10
30	**30**	20
40	60	**50**
70	70	70

6) Activities 20,40, and 60

10	10	10
30	30	**20**
40	**60**	50
70	70	70

7) Activities 10 and 20

10	**10**	**10**
30	30	**20**
40	60	50
70	70	70

8) Activities 30 and 40

10	10	10
30	**30**	20
40	60	50
70	70	70

9) Activities 40 and 50

10	10	10
30	30	20
40	60	**50**
70	70	70

Combinations 1 to 4 are considered as the obvious combinations, since you just pick critical activities from each sequence step.

Combinations 5 and 6 are a little bit harder to spot. However, if you study the network carefully, you should be able to identify them.

Combination 7 cannot be used since it will shorten 2 critical activities (10 and 20) on the same critical path (3rd path) twice.

Combination 8 cannot be used since it will shorten 2 critical activities (30 and 40) on the same critical path (1st path) twice. Moreover, it does not shorten the 3rd critical path.

Combination 9 cannot be used since it does not shorten any critical activity on the 2nd critical path.

ACTIVITY SELECTION AND TALLY TABLE

ACT	Slope	1	1	1	1	2	2	2	2	3	3	3	3	3	3
60	50					x						x			x
40	100			**x**		x						x			x
30	120		x				**x**				x			x	
10	150	x						x		**x**					
20	150										x				x
70	200				x				x				x		
50	300											x		x	
		300	240	**100**	200	150	**120**	150	200	**150**	270	450	200	420	300

NETWORK LIMIT DETERMINATION TABLE

CYCLE			1			2			3		
ACTS Changed			40			30			10		
Network Limit			1			1			none		
Days Changed			1			1			2		
i	**j**	**Lag**	**i**	**j**	**Lag**	**i**	**j**	**Lag**	**i**	**j**	**Lag**
10	**20**	**0**							<<	<	
10	**30**	**0**							<<	<	
20	**40**	**3**					<	**2**	<	<	
20	**50**	**0**							<	<	
30	**40**	**0**				<<	<		<	<	
30	**60**	**0**				<<	<		<	<	
40	**70**	**0**	<<	<		<	<		<	<	
50	**70**	**2**		<	**1**		<	**0**	<	<	
60	**70**	**1**		<	**0**	<	<		<	<	

Network limit is none because shortening activity 10 does not reduce any of the lags. Can you tell why?
If you study the arrow head in the above table from cycle 1, 2, and this cycle 3 carefully, you will see there is no unpaired arrow in i and j columns in cycle 3.

Cycle 4

	ID	TC	TN	CC	CN	T
A	**10**	**2**	**4**	**600**	**300**	2
B	**20**	**1**	**2**	**800**	**650**	2
C	**30**	**3**	**5**	**480**	**240**	4
D	**40**	**1**	**3**	**300**	**100**	2
E	**50**	**2**	**4**	**1600**	**1000**	4
F	**60**	**1**	**2**	**1150**	**1100**	2
G	**70**	**2**	**3**	**500**	**300**	3
			sum	**5430**	**3690**	**4210**

Project Cost = 3910 + 2 x 150 = 4210
at 11 days with 3 critical paths.
Activity A cannot be crashed anymore.

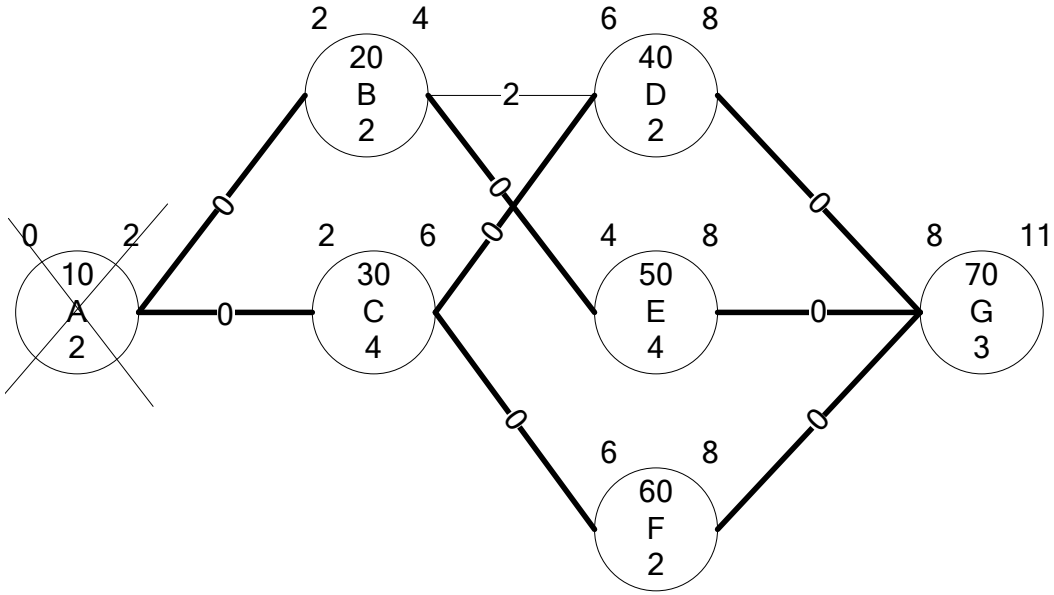

TALLY OF CRITICAL PATH

STEP	ACTIVITIES	0	1	1	2	2	2	3	3	3												
1	10	10	10	10	10	10	10	~~10~~	~~10~~	~~10~~												
2	20,30	30	30	30	30	30	20	30	30	20												
3	40,50,60	40	40	60	40	60	50	40	60	50												
4	70	70	70	70	70	70	70	70	70	70												

ACTIVITY SELECTION AND TALLY TABLE

ACT	Slope	1	1	1	1	2	2	2	2	3	3	3	3	3	3	4	4	4	4	4						
60	50					x						x			x		x			x						
40	100			**x**		x						x			x		x			x						
30	120		x				x				x			x		x			x							
10	150	x						x		x																
20	150										x				x	x				x						
70	200				x				x				x					**x**								
50	300											x		x			x		x							
		300	240	**100**	200	150	**120**	150	200	150	270	450	200	420	300	270	450	**200**	420	300						

NETWORK LIMIT DETERMINATION TABLE

CYCLE			1			2			3			4																				
ACTS Changed			40			30			10			70																				
Network Limit			1			1			none			none																				
Days Changed			1			1			2			1																				
i	**j**	**Lag**	**i**	**j**	**Lag**	**i**	**j**	**Lag**	**i**	**j**	**Lag**	**i**	**j**	**Lag**																		
10	**20**	**0**							<<	<																					
10	**30**	**0**							<<	<																					
20	**40**	**3**					<	**2**	<	<																					
20	**50**	**0**							<	<																					
30	**40**	**0**				<	<		<	<																					
30	**60**	**0**				<	<		<	<																					
40	**70**	**0**	<<	<		<	<		<	<																					
50	**70**	**2**		<	**1**		<	**0**	<	<																					
60	**70**	**1**		<	**0**	<	<		<	<																					

Cycle 5

	ID	TC	TN	CC	CN	T
A	**10**	**2**	**4**	**600**	**300**	2
B	**20**	**1**	**2**	**800**	**650**	2
C	**30**	**3**	**5**	**480**	**240**	4
D	**40**	**1**	**3**	**300**	**100**	2
E	**50**	**2**	**4**	**1600**	**1000**	4
F	**60**	**1**	**2**	**1150**	**1100**	2
G	**70**	**2**	**3**	**500**	**300**	**2**
			sum	**5430**	**3690**	**4410**
Project Cost = 4210 + 200 = 4410 at 10 days with 3 critical paths. Act 70 cannot be crashed anymore.						

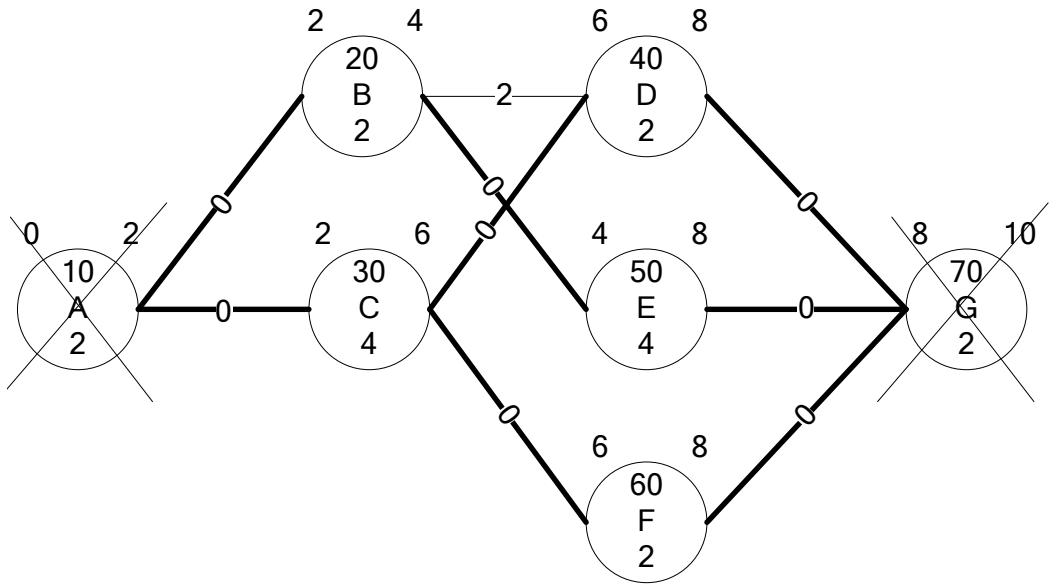

TALLY OF CRITICAL PATH

STEP	ACTIVITIES	0	1	1	2	2	2	3	3	3	4	4	4									
1	10	10	10	10	10	10	10	~~10~~	~~10~~	~~10~~	~~10~~	~~10~~	~~10~~									
2	20,30	30	30	30	30	30	20	30	30	20	30	30	20									
3	40,50,60	40	40	60	40	60	50	40	60	50	40	60	50									
4	70	70	70	70	70	70	70	70	70	70	~~70~~	~~70~~	~~70~~									

ACTIVITY SELECTION AND TALLY TABLE

ACT	Slope	1	1	1	1	2	2	2	2	3	3	3	3	3	3	4	4	4	4	4	5	5	5	5		
60	50					x						x			x		x			x		x		x		
40	100			**x**		x						x			x		x			x		x		x		
30	120		x				x				x			x		x			x		**x**		x			
10	150	x						x		x																
20	150										x				x	x				x	**x**			x		
70	200				x				x				x					**x**								
50	300											x		x			x		x			x	x			
		300	240	**100**	200	150	**120**	150	200	150	270	450	200	420	300	270	450	**200**	420	300	**270**	450	420	300		

NETWORK LIMIT DETERMINATION TABLE

CYCLE			1			2			3			4			5.1			5.2			5.3			5.4			5.5		
ACTS Changed			40			30			10			70			20,30			20,30			20,30			20,30			20,30		
Network Limit			1			1			none			none															none		
Days Changed			1			1			2			1															1		
i	**j**	**Lag**	**i**	**j**	**Lag**	**i**	**j**	**Lag**	**i**	**j**	**Lag**	**i**	**j**	**Lag**	**i**	**j**	**Lag**	**i**	**j**	**Lag**	**i**	**j**	**Lag**	**i**	**j**	**Lag**	**i**	**j**	**Lag**
10	**20**	**0**							<<	<																			
10	**30**	**0**							<<	<																			
20	**40**	**3**					<	**2**	<	<					<<			<<			<<	<		<<	<		<<	<	**2**
20	**50**	**0**							<	<					<<			<<	<		<<	<		<<	<		<<	<	
30	**40**	**0**				<<	<		<	<					<<			<<			<<	<		<<	<		<<	<	
30	**60**	**0**				<<	<		<	<					<<			<<			<<			<<	<		<<	<	
40	**70**	**0**	<<	<		<	<		<	<											<			<			<	<	
50	**70**	**2**		<	**1**		<	**0**	<	<								<			<			<			<	<	
60	**70**	**1**		<	**0**	<	<		<	<														<			<	<	

Since the network limit is NONE, the days changed is the minimum possible shorten days between activity 20 and 30. However, they are the same in this case.

Cycle 6

	ID	TC	TN	CC	CN	T
A	**10**	**2**	**4**	**600**	**300**	2
B	**20**	**1**	**2**	**800**	**650**	**1**
C	**30**	**3**	**5**	**480**	**240**	**3**
D	**40**	**1**	**3**	**300**	**100**	2
E	**50**	**2**	**4**	**1600**	**1000**	4
F	**60**	**1**	**2**	**1150**	**1100**	2
G	**70**	**2**	**3**	**500**	**300**	2
			sum	**5430**	**3690**	**4680**

Project Cost = 4210 + 270 = 4680
at 9 days with 3 critical paths.
Act 20 and 30 cannot be crashed anymore.

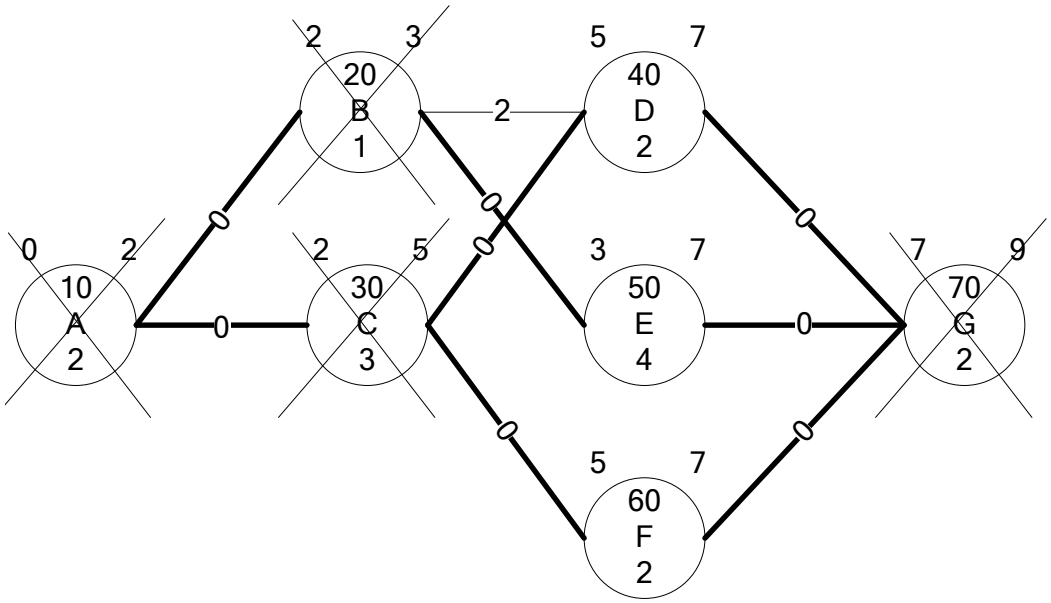

TALLY OF CRITICAL PATH

STEP	ACTIVITIES	0	1	1	2	2	2	3	3	3	4	4	4	5	5	5						
1	10	10	10	10	10	10	10	~~10~~	~~10~~	~~10~~	~~10~~	~~10~~	~~10~~	~~10~~	~~10~~	~~10~~						
2	20,30	30	30	30	30	30	20	30	30	20	30	30	20	~~30~~	~~30~~	~~20~~						
3	40,50,60	40	40	60	40	60	50	40	60	50	40	60	50	40	60	50						
4	70	70	70	70	70	70	70	70	70	70	~~70~~	~~70~~	~~70~~	~~70~~	~~70~~	~~70~~						

ACTIVITY SELECTION AND TALLY TABLE

ACT	Slope	1	1	1	1	2	2	2	2	3	3	3	3	3	3	4	4	4	4	4	5	5	5	5	6	
60	50					x						x			x		x			x		x		x	**x**	
40	100			**x**		x						x			x		x			x		x		x	**x**	
30	120		x				x				x			x		x			x		**x**		x			
10	150	x						x		x																
20	150										x				x	x				x	**x**			x		
70	200				x				x				x					**x**								
50	300											x		x			x		x			x	x		**x**	
		300	240	**100**	300	150	**120**	150	300	150	270	450	200	420	300	270	450	**200**	420	300	**270**	450	420	300	**450**	

NETWORK LIMIT DETERMINATION TABLE

CYCLE			1			2			3			4			5			6											
ACTS Changed			40			30			10			70			20,30			40,50,60											
Network Limit			1			1			none			none			none			none											
Days Changed			1			1			2			1			1			1											
i	**j**	**Lag**	**i**	**j**	**Lag**	**i**	**j**	**Lag**	**i**	**j**	**Lag**	**i**	**j**	**Lag**	**i**	**j**	**Lag**	**i**	**j**	**Lag**									
10	**20**	**0**							<<	<																			
10	**30**	**0**							<<	<																			
20	**40**	**3**					**<**	**2**	<	<					<<	<													
20	**50**	**0**							<	<					<<	<													
30	**40**	**0**				**<<**	**<**		<	<					<<	<													
30	**60**	**0**				**<<**	**<**		<	<					<<	<													
40	**70**	**0**	<<	<		**<**	**<**		<	<					<	<		<<	**<**										
50	**70**	**2**		<	**1**		**<**	**0**	<	<					<	<		<<	**<**										
60	**70**	**1**		**<**	**0**	**<**	**<**		<	<					<	<		<<	**<**										

Since the network limit is NONE, the days changed is the minimum possible shorten days between activity 40, 50 and 60. Thus, the days changed are 1 days.

Cycle 7

	ID	TC	TN	CC	CN	T
A	10	2	4	600	300	2
B	20	1	2	800	650	1
C	30	3	5	480	240	3
D	40	1	3	300	100	1
E	50	2	4	1600	1000	3
F	60	1	2	1150	1100	1
G	70	2	3	500	300	2
			sum	5430	3690	5130

Project Cost = 4680 + 450 = 5130
at 8 days with 3 critical paths.
Act 40 and 60 cannot be crashed anymore.

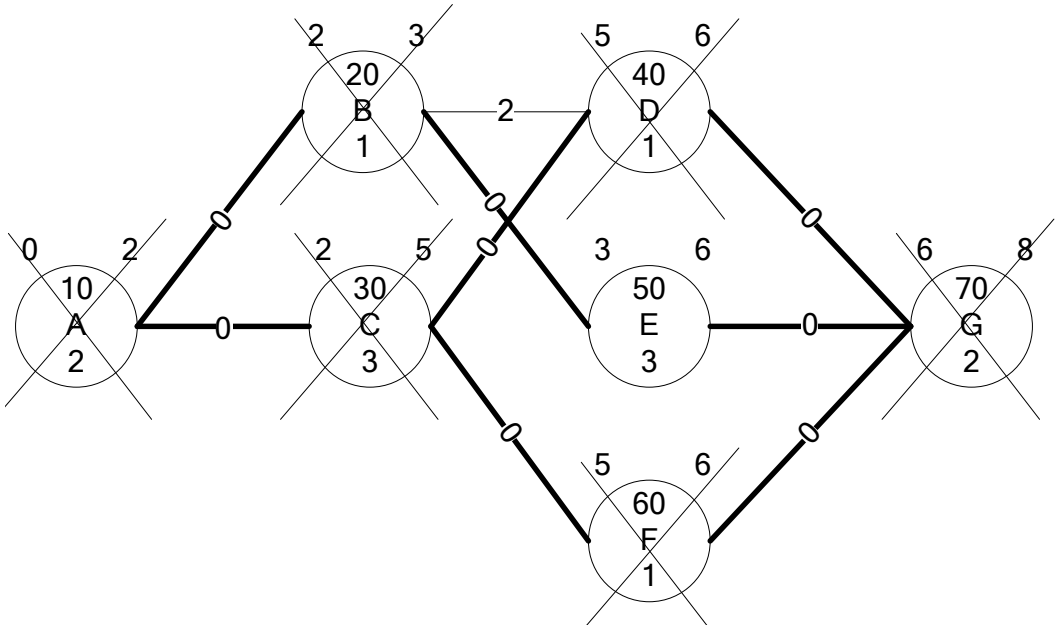

TALLY OF CRITICAL PATH

STEP	ACTIVITIES	0	1	1	2	2	2	3	3	3	4	4	4	5	5	5	6	6	6			
1	10	10	10	10	10	10	10	~~10~~	~~10~~	~~10~~	~~10~~	~~10~~	~~10~~	~~10~~	~~10~~	~~10~~	~~10~~	~~10~~	~~10~~			
2	20,30	30	30	30	30	30	20	30	30	20	30	30	20	~~30~~	~~30~~	~~20~~	~~30~~	~~30~~	~~20~~			
3	40,50,60	40	40	60	40	60	50	40	60	50	40	60	50	40	60	50	~~40~~	~~60~~	50			
4	70	70	70	70	70	70	70	70	70	70	~~70~~	~~70~~	~~70~~	~~70~~	~~70~~	~~70~~	~~70~~	~~70~~	~~70~~			

At this point it is impossible to reduce project duration since the only activity that can be shortened is activity 50.
So we cannot satisfy the condition of selecting only one critical activity from each critical path.

ACTIVITY SELECTION AND TALLY TABLE

ACT	Slope	1	1	1	1	2	2	2	2	3	3	3	3	3	3	4	4	4	4	4	5	5	5	5	6	7
60	50					x						x			x		x			x		x		x	**x**	
40	100			**x**		x						x			x		x			x		x		x	**x**	
30	120		x				x				x			x		x			x		**x**		x			
10	150	x						x		x																
20	150										x				x	x				x	**x**			x		
70	200				x				x				x					**x**								
50	300											x		x			x		x			x	x		**x**	**X**
		300	240	**100**	200	150	**120**	150	200	150	270	450	200	420	300	270	450	**200**	420	300	**270**	450	420	300	**450**	**300**

NETWORK LIMIT DETERMINATION TABLE

CYCLE			1			2			3			4			5			6			7 .1			7.2			7.3		
ACTS Changed			40			30			10			70			20,30			40,50,60			50			50			50		
Network Limit			1			1			none			none			none			none									none		
Days Changed			1			1			2			1			1			1									1		
i	**j**	**Lag**	**i**	**j**	**Lag**	**i**	**j**	**Lag**	**i**	**j**	**Lag**	**i**	**j**	**Lag**	**i**	**j**	**Lag**	**i**	**j**	**Lag**	**i**	**j**	**Lag**	**i**	**j**	**Lag**	**i**	**j**	**Lag**
10	**20**	**0**							<<	<																			
10	**30**	**0**							<<	<																			
20	**40**	**3**					**<**	**2**	<	<					<<	<													
20	**50**	**0**							<	<					<<	<													
30	**40**	**0**				**<<**	**<**		<	<					<<	<													
30	**60**	**0**				**<<**	**<**		<	<					<<	<													
40	**70**	**0**	<<	<		**<**	**<**		<	<					<	<		<<	**<**			<			X			X	
50	**70**	**2**		<	**1**		**<**	**0**	<	<					<	<		<<	**<**		<<	<		<<	<		<<	X	**1**
60	**70**	**1**		**<**	**0**	**<**	**<**		<	<					<	<		<<	**<**			<			<			X	

Since lag 40-70 is 0, we cannot move 70 forward as indicated in the table in cycle 7.2. Thus, we will cross ("X") all the arrows for activity 70 out, shown in cycle 7.3.

Final schedule at all crash point.

	ID	TC	TN	CC	CN	T
A	**10**	**2**	**4**	**600**	**300**	2
B	**20**	**1**	**2**	**800**	**650**	1
C	**30**	**3**	**5**	**480**	**240**	3
D	**40**	**1**	**3**	**300**	**100**	1
E	**50**	**2**	**4**	**1600**	**1000**	**2**
F	**60**	**1**	**2**	**1150**	**1100**	1
G	**70**	**2**	**3**	**500**	**300**	2
			sum	**5430**	**3690**	**5430**
Project Cost = 5130 + 300 = 5430 at 8 days with 3 critical paths. Act 40 and 60 cannot be crashed anymore.						

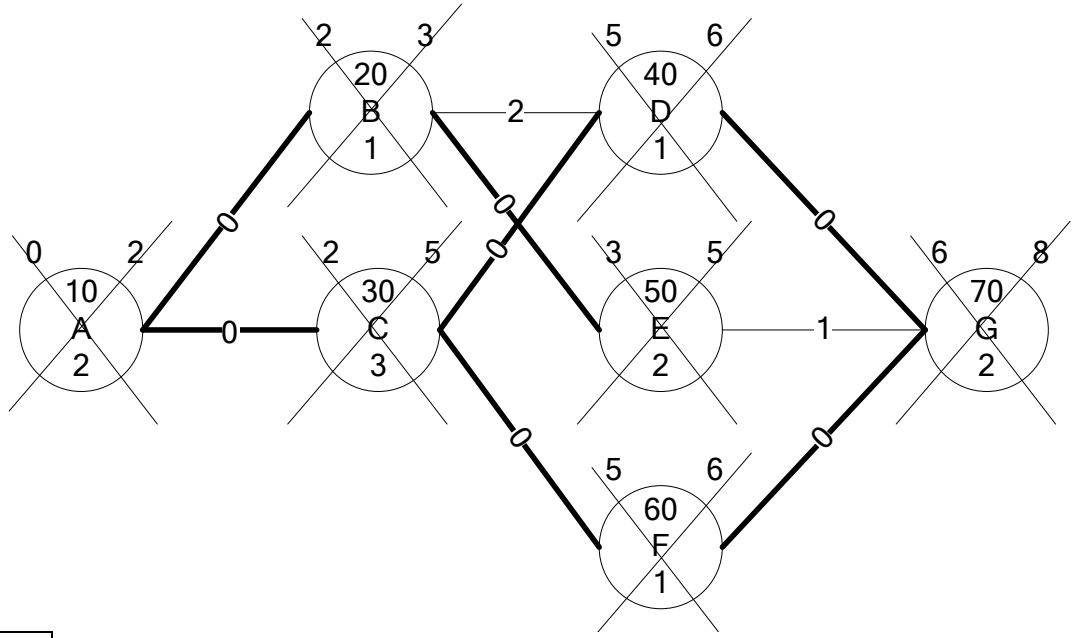

Cycle	Duration	Direct Cost	Indirect Cost	Total Cost
	15	3690	3750	7440
1	14	3790	3500	7290
2	13	3910	3250	7160
3	11	4210	2750	6960
4	10	4410	2500	**6910**
5	9	4680	2250	6930
6	8	5130	2000	7130
7	8	5430	2000	7430

Given indirect cost is $250/day.

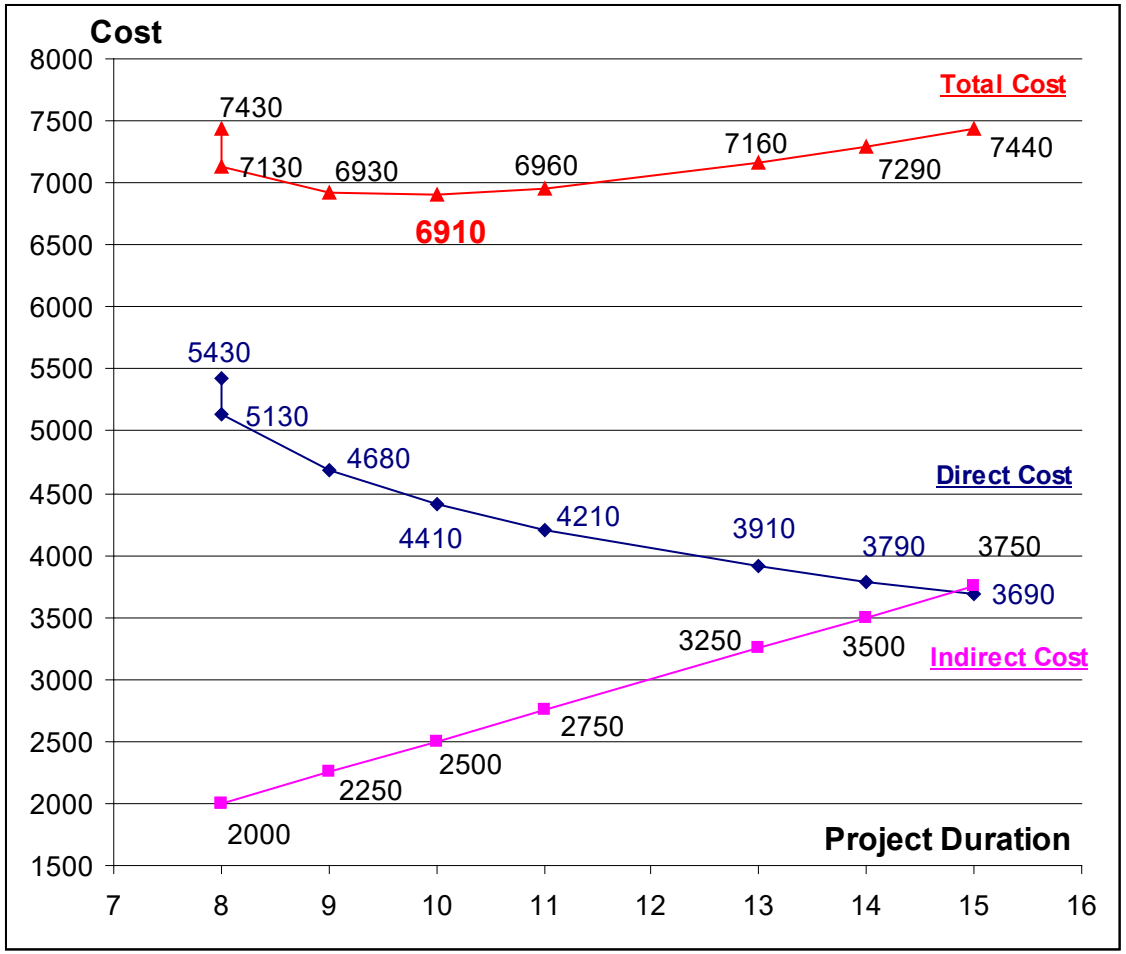
Cost
8000
7500
7000
6500
6000
5500
5000
4500
4000
3500
3000
2500
2000
1500
7
8
9
10
11
12
13
14
15
16
Total Cost
7430
7130
6930
6910
6960
7160
7290
7440
Direct Cost
5430
5130
4680
4410
4210
3910
3790
3750
3690
Indirect Cost
2000
2250
2500
2750
3250
3500
Project Duration

8. TIME-COST TRADEOFF-LP

Example of Time-Cost Tradeoff using LINDO

Formulas:	a= Cn-Tn*b				b= (Cn-Cc)/(Tn-Tc)	
	Normal		Crash		Cost = a + b*Time	
Act No	Time Tn	Cost Cn	Time Tc	Cost Cc	a	b
10	5	500	5	500	500	**0**
20	3	900	1	1200	1350	**-150**
30	7	3250	4	4150	5350	**-300**
32	5	1000	3	1300	1750	**-150**
40	6	1400	3	2750	4100	**-450**
42	5	1100	3	1900	3100	**-400**
44	7	1500	4	2400	3600	**-300**
50	10	4200	5	7200	10200	**-600**
52a	6	0	4	500	1500	**-250**
52b	2	800	0	1000	1000	**-100**
60	2	1100	1	1300	1500	**-200**
70	3	1300	2	1500	1900	**-200**
	Normal Cost	17050	All Crash Cost	25700	**35850** = Sum of Fixed Costs	

Step 1: Calculate COST SLOPE (b) for each activity as shown in the table above.

Step 2: Coding in LINDO (see Figure 2)

Step 2.1: Setup OBJECTIVE FUNCTION in LINDO

MIN -150 T20 - 300 T30 -150 T32 - 450 T40 - 400 T42 - 300 T44 - 600 T50 - 250 T52a - 200 T60 - 100 T52b - 200 T70 + 35850 FIXED

Step 2.2: Tell LINDO, where constraints START by typing in

ST

Step 2.3: Setup PRECEDENCE CONSTRAINTS

T10 + ESD10 - ESD20 <= 0

T20 + ESD20 - ESD30 <= 0

T20 + ESD20 - ESD32 <= 0

T30 + ESD30 - ESD40 <= 0

T30 + ESD30 - ESD42 <= 0

T32 + ESD32 - ESD40 <= 0

T32 + ESD32 - ESD42 <= 0

T32 + ESD32 - ESD44 <= 0

T40 + ESD40 - ESD50 <= 0

T40 + ESD40 - ESD52a <= 0

T42 + ESD42 - ESD50 <= 0

T42 + ESD42 - ESD52a <= 0

T44 + ESD44 - ESD52a <= 0

T50 + ESD50 - ESD60 <= 0

T52a + ESD52a - ESD52b <= 0

T52b + ESD52b - ESD60 <= 0

T60 + ESD60 - ESD70 <= 0

Step 2.4: Setup ACTIVITY DURATION CONSTAINTS

T10 >= 5

T10 <= 5

T20 >= 1

T20 <= 3

T30 >= 4

T30 <= 7

T32 >= 3

T32 <= 5

T40 >= 3

T40 <= 6

T42 >= 3

T42 <= 5

T44 >= 4

T44 <= 7

T50 >= 5

T50 <= 10

T52a >= 4

T52a <= 6

T60 >= 1

T60 <= 2

T52b >= 0

T52b <= 2

T70 >= 2

T70 <= 3

Step 2.5: Setup PROJECT START DATE

ESD10 = 0

Step 2.6: Setup TARGETED PROJECT DURATION

T70 + ESD70 <= 36

Note that, number of the right hand side should set to NORMAL POINT of project duration, which is 36 days for this example.

Step 2.7: Assign value to FIXED CONSTANT

FIXED = 1

Note that, because LINDO does not allow constants in objective function, we must create variable (instead of constants) call FIXED in objective function and then assign value of 1 to it later.

Step 2.8: Tell LINDO where constraints END by typing in

END

Step 3.1: Run Solve. (See Figure 3.1)

Step 4.1: After you solve the problem, go to Reports → Parametrics. (See Figure 4.1)

Step 4.2: Setup Parametric Row and New RHS. (See Figure 4.2)

Step 5: Get results from Report Window (Figure 5.1) and Parametrics Graph Window (Figure 5.2)

Begin the new project with blank file.

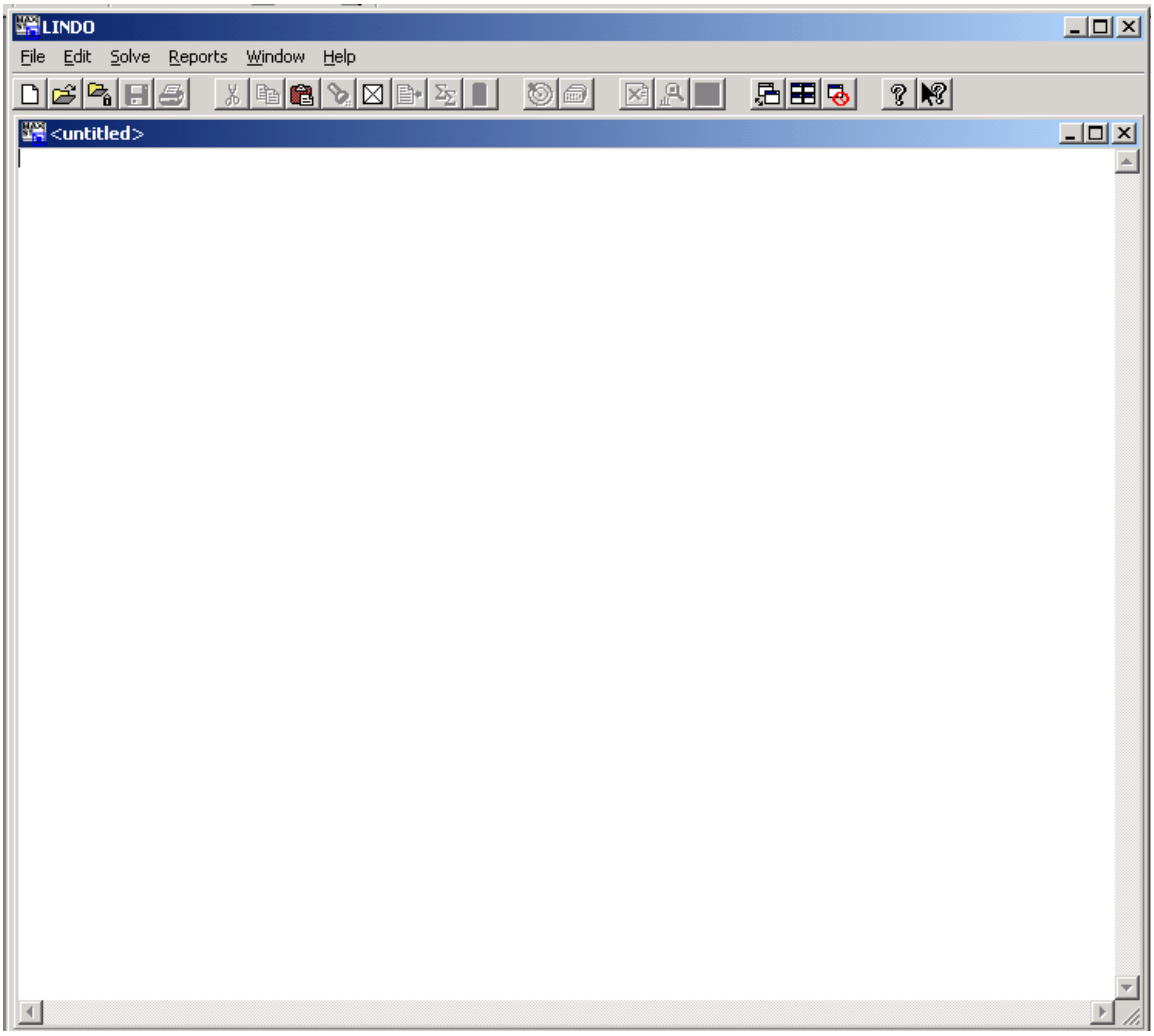

Figure 1: Blank LINDO File.

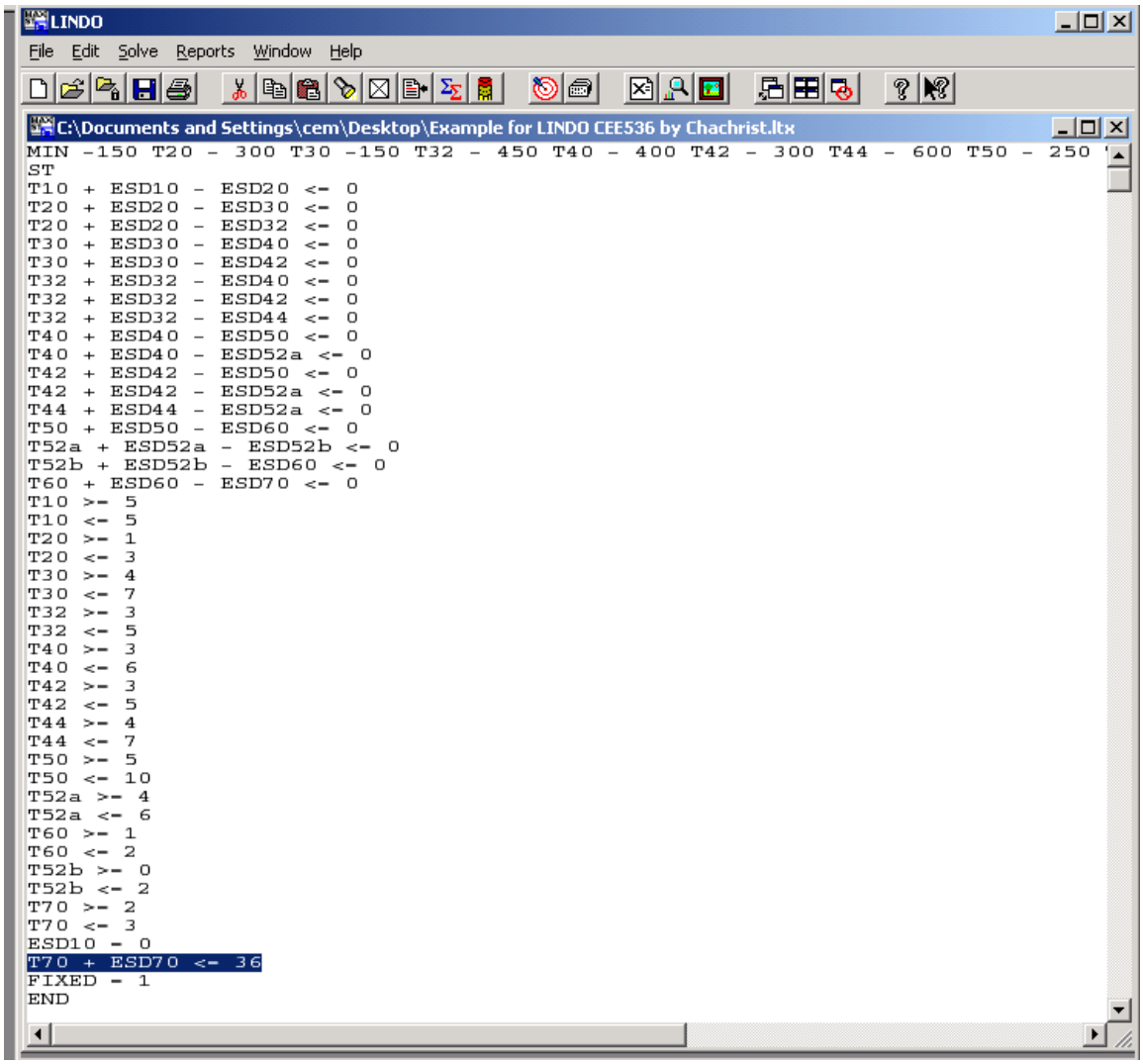

Figure 2: Coding.

Note that, the highlighted row is called “Parametric Row”, which will be used to derive minimum project cost at different project duration. Each equation (objective function and constaints) equals to 1 row, excluding ST and END commands. So, the Parametric Row in Figure 2 is 44.

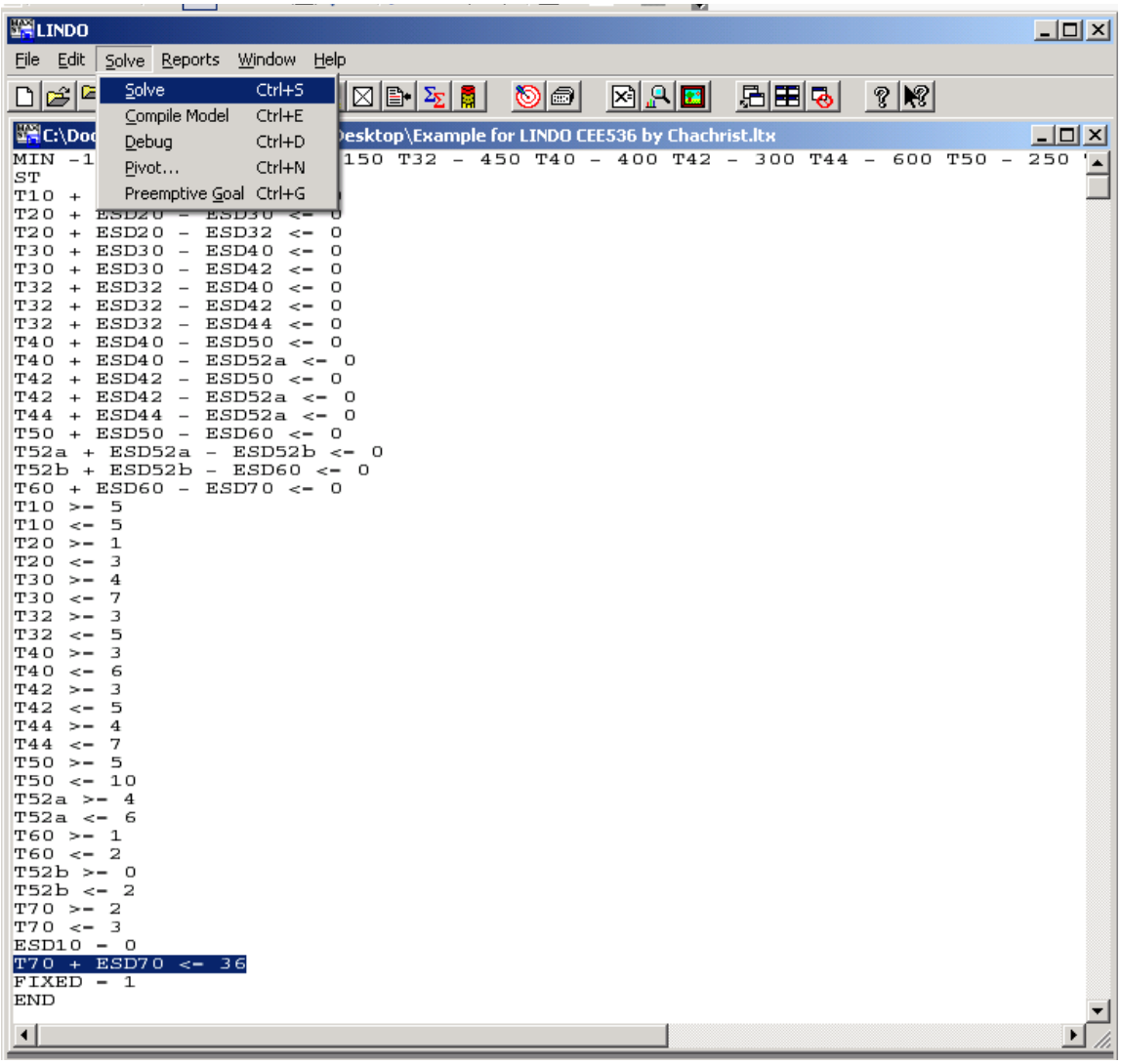

Figure 3.1: Solving

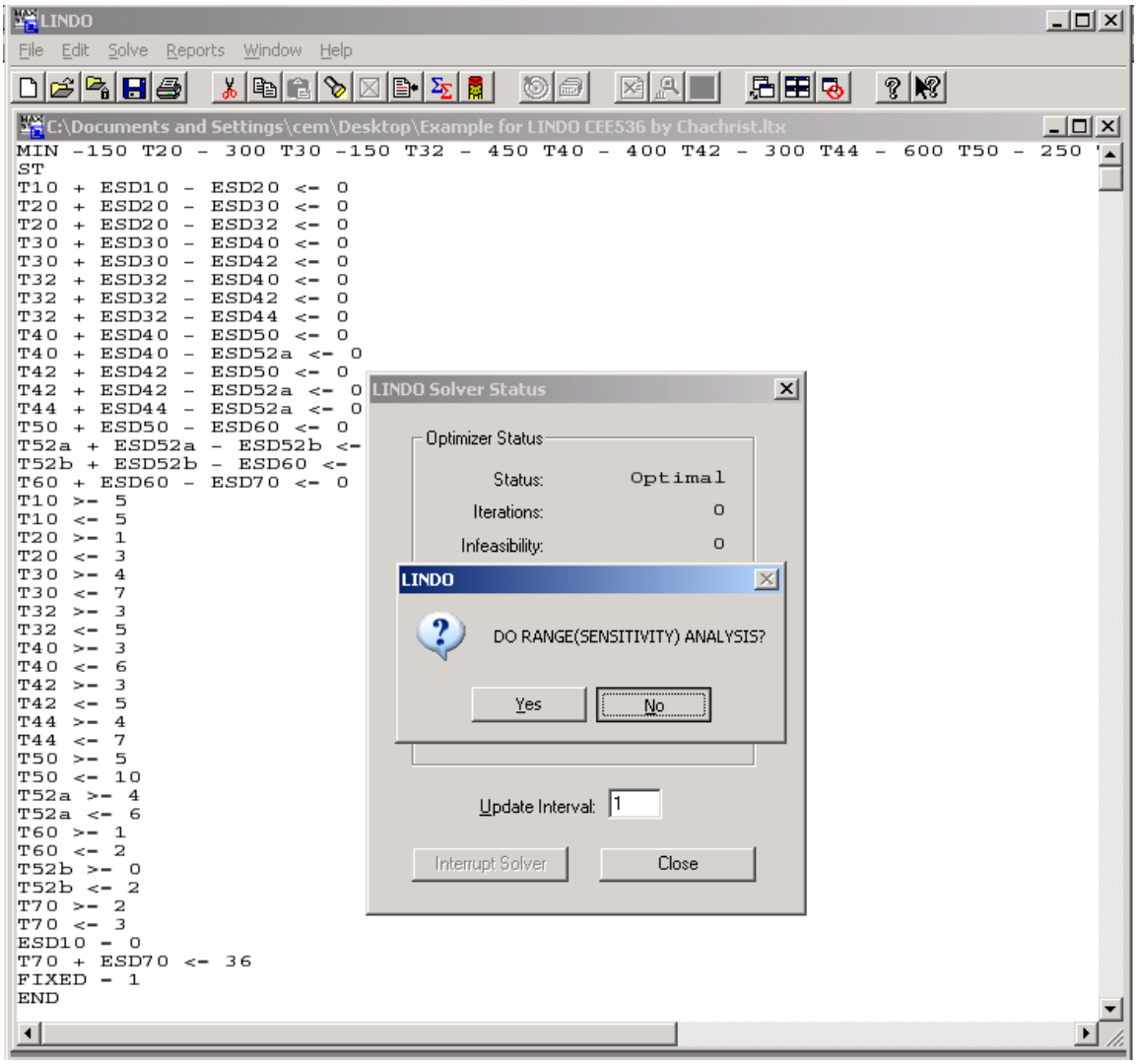

Figure 3.2: After solving the problem, click No, and the Close.

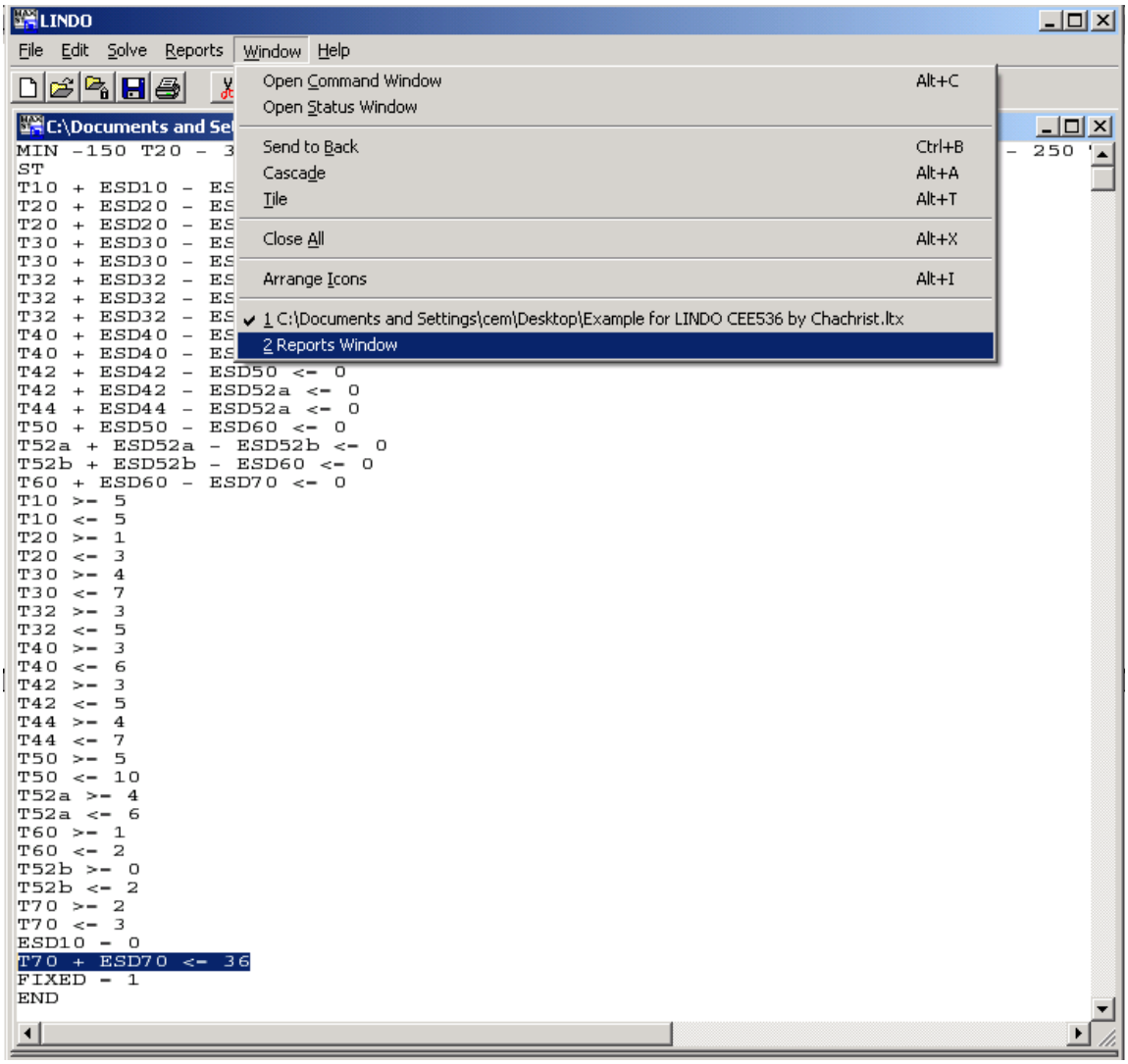

Figure 3.3: To check the results from solving (or minimizing) the problem under the condition of project duration must equal to 36 days based on the highlighted code.

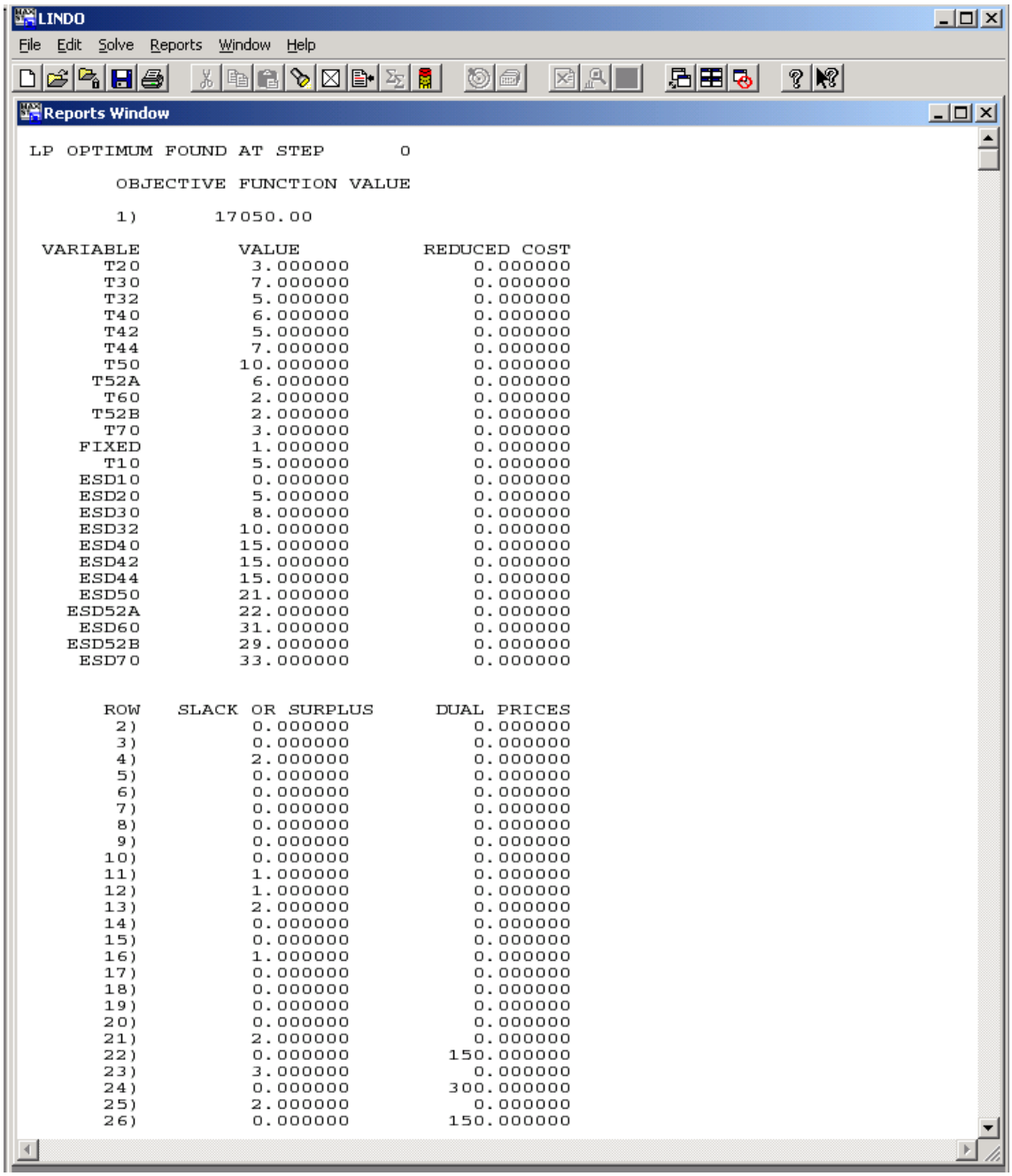


```
LP OPTIMUM FOUND AT STEP       0

        OBJECTIVE FUNCTION VALUE

        1)       17050.00

 VARIABLE         VALUE          REDUCED COST
       T20          3.000000          0.000000
       T30          7.000000          0.000000
       T32          5.000000          0.000000
       T40          6.000000          0.000000
       T42          5.000000          0.000000
       T44          7.000000          0.000000
       T50         10.000000          0.000000
      T52A          6.000000          0.000000
       T60          2.000000          0.000000
      T52B          2.000000          0.000000
       T70          3.000000          0.000000
     FIXED          1.000000          0.000000
       T10          5.000000          0.000000
     ESD10          0.000000          0.000000
     ESD20          5.000000          0.000000
     ESD30          8.000000          0.000000
     ESD32         10.000000          0.000000
     ESD40         15.000000          0.000000
     ESD42         15.000000          0.000000
     ESD44         15.000000          0.000000
     ESD50         21.000000          0.000000
    ESD52A         22.000000          0.000000
     ESD60         31.000000          0.000000
    ESD52B         29.000000          0.000000
     ESD70         33.000000          0.000000

       ROW    SLACK OR SURPLUS      DUAL PRICES
        2)          0.000000          0.000000
        3)          0.000000          0.000000
        4)          2.000000          0.000000
        5)          0.000000          0.000000
        6)          0.000000          0.000000
        7)          0.000000          0.000000
        8)          0.000000          0.000000
        9)          0.000000          0.000000
       10)          0.000000          0.000000
       11)          1.000000          0.000000
       12)          1.000000          0.000000
       13)          2.000000          0.000000
       14)          0.000000          0.000000
       15)          0.000000          0.000000
       16)          1.000000          0.000000
       17)          0.000000          0.000000
       18)          0.000000          0.000000
       19)          0.000000          0.000000
       20)          0.000000          0.000000
       21)          2.000000          0.000000
       22)          0.000000        150.000000
       23)          3.000000          0.000000
       24)          0.000000        300.000000
       25)          2.000000          0.000000
       26)          0.000000        150.000000
```

Figure 3.4: Results from solving (or minimizing) the problem at specified project duration of 36 days.

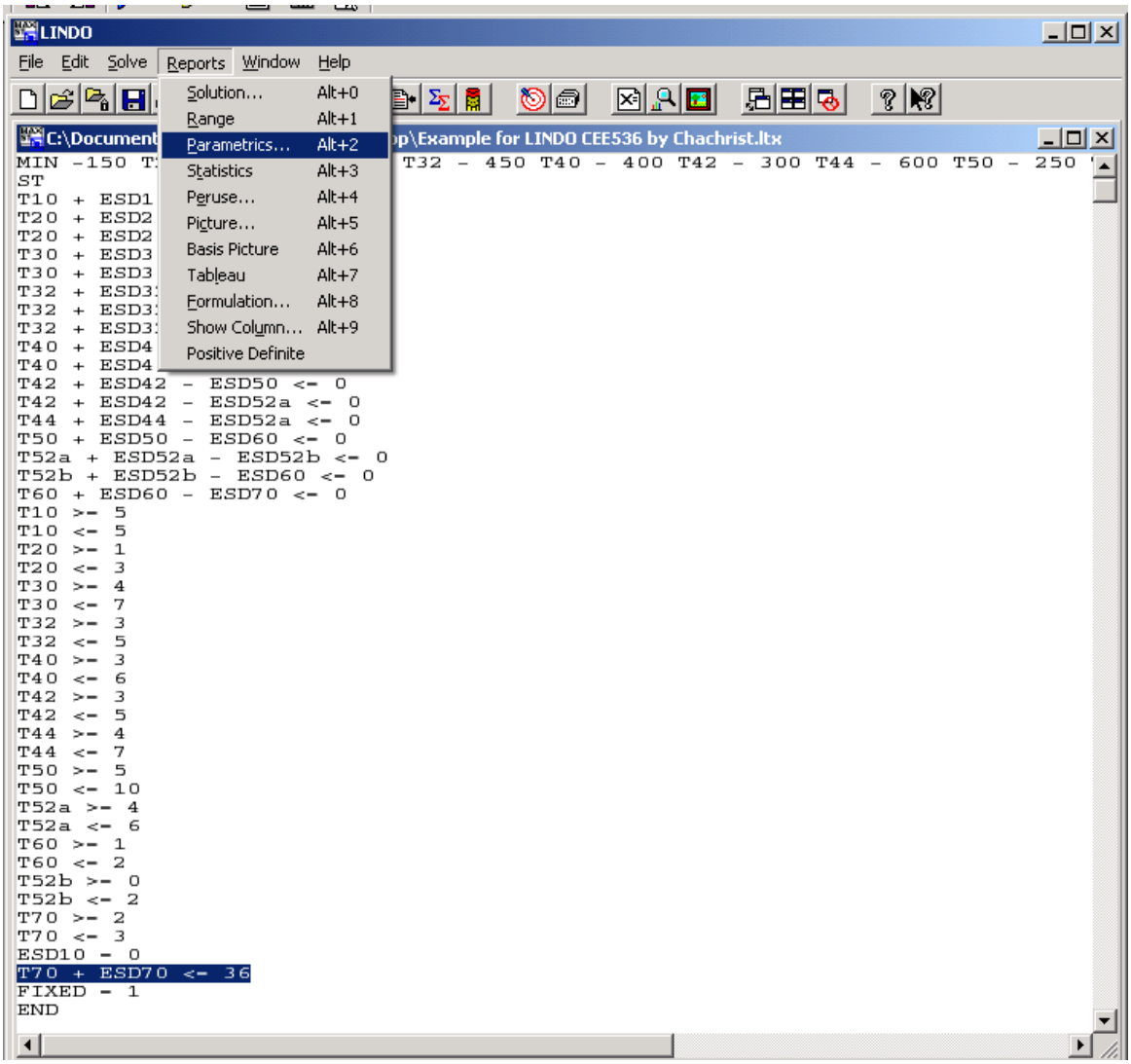

Figure 4.1: Parametrics

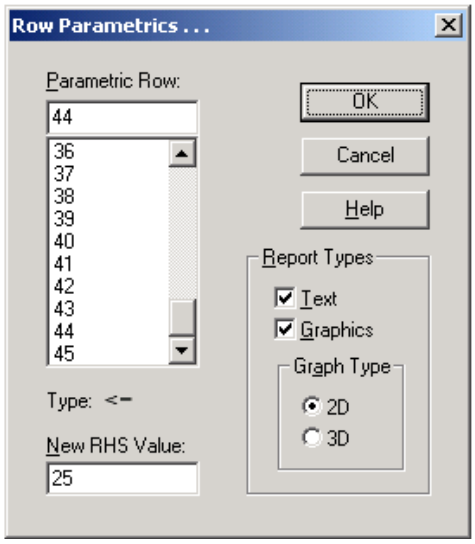

Figure 4.2: Setup Parametric options.

We want LINDO to automatically change the project duration and find the minimum project cost. To do so, set New RHS Value to CRASH POINT of project duration. (RHS = Right Hand Side). LINDO will change the number on the RHS of the code in the specified Parametric Row (highlighted code in Figure 2)

Make sure your Parametric Row is correct. Each equation equals to 1 row, excluding ST and END commands.

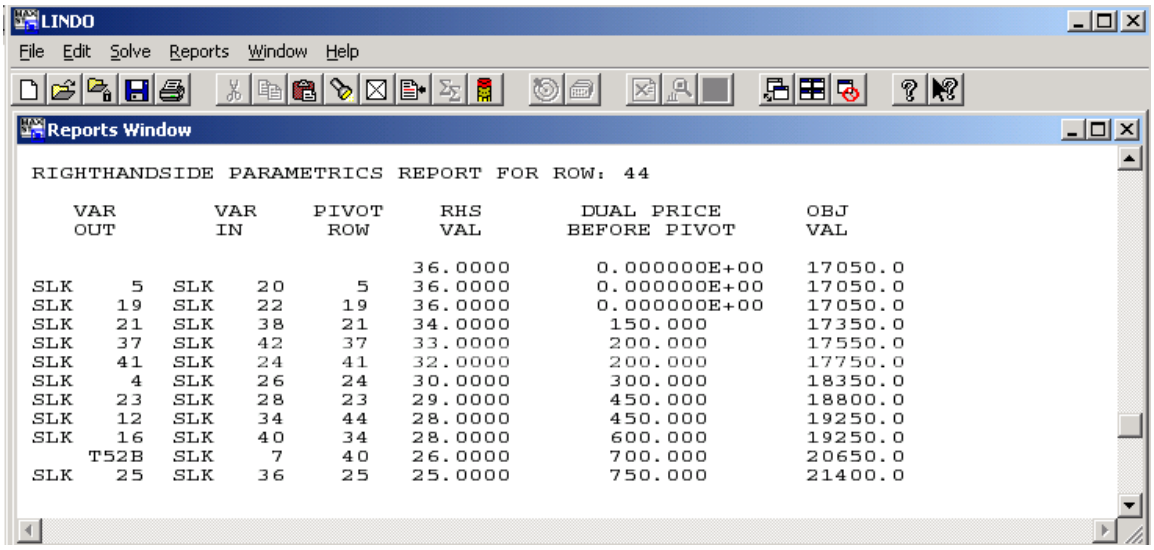

Figure 5.1: Results from Report Window.

Notice that, LINDO optimized project cost from 36 days (our original value or NORMAL POINT) to 25 days (our New RHS Value or CRASH POINT)

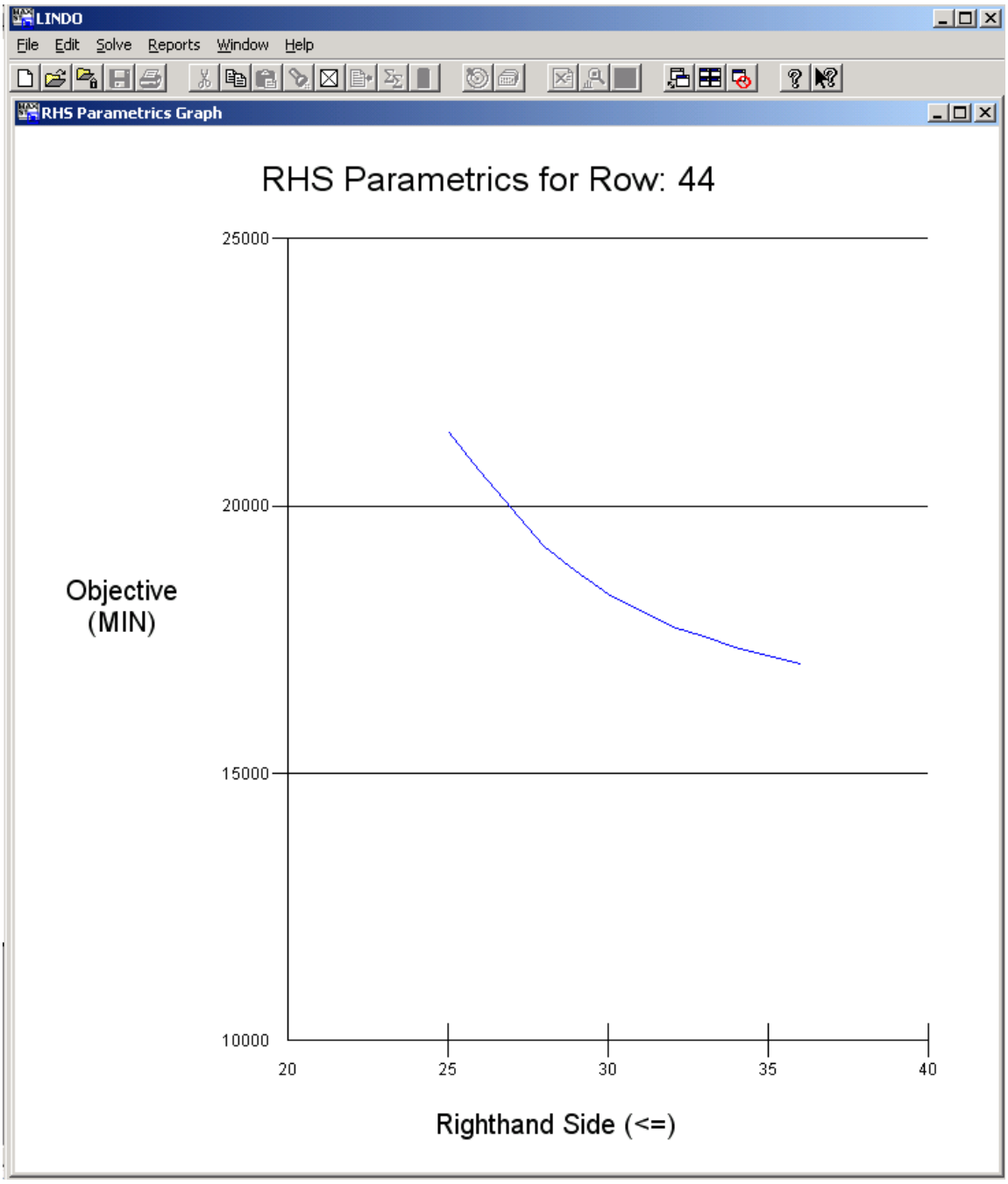
LINDO
File Edit Solve Reports Window Help
RHS Parametrics Graph
RHS Parametrics for Row: 44
25000
20000
15000
10000
Objective
(MIN)
20
25
30
35
40
Righthand Side (<=)

Using Excel Solver to solve Time-Cost Tradeoff problem

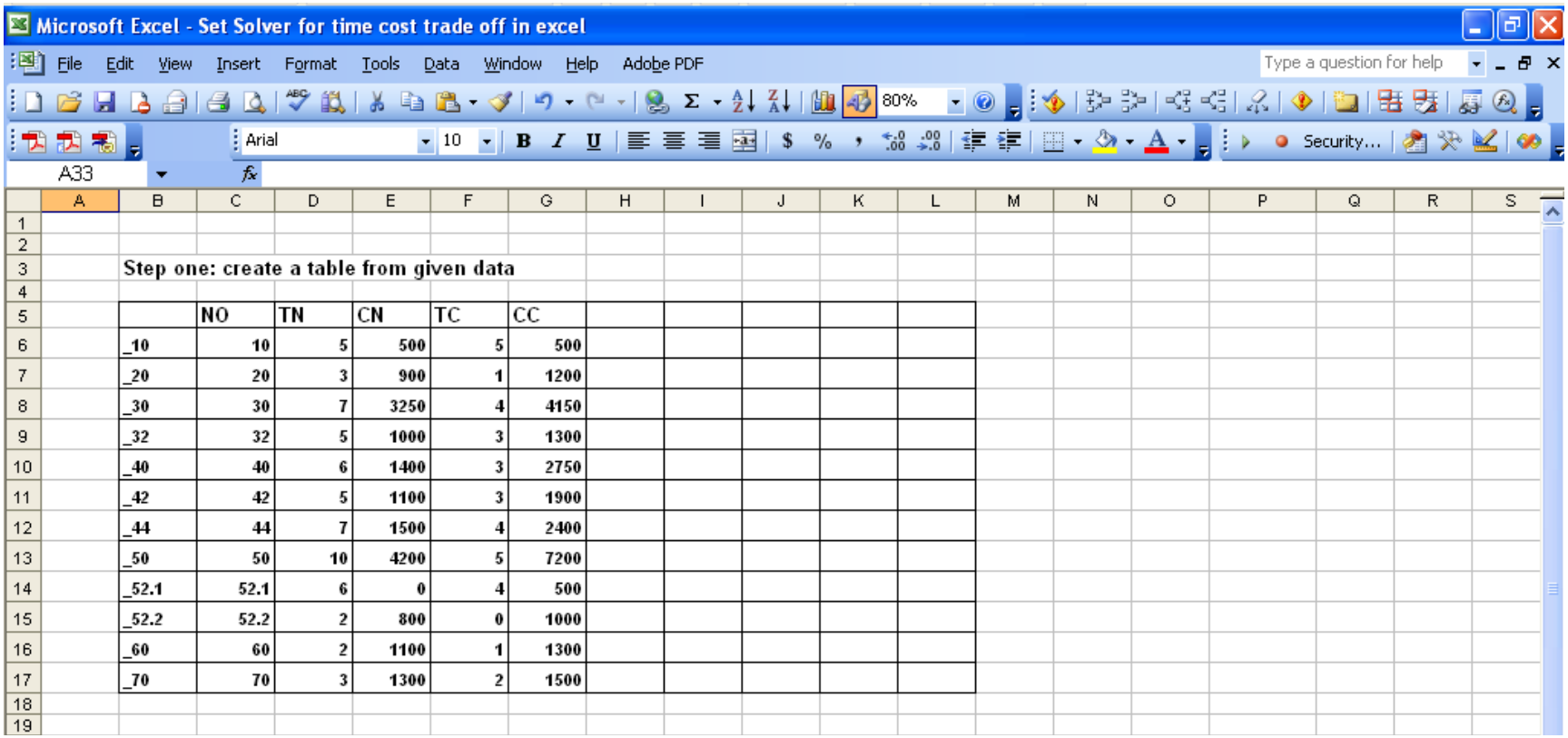

Step one: create a table from given data

	NO	TN	CN	TC	CC
_10	10	5	500	5	500
_20	20	3	900	1	1200
_30	30	7	3250	4	4150
_32	32	5	1000	3	1300
_40	40	6	1400	3	2750
_42	42	5	1100	3	1900
_44	44	7	1500	4	2400
_50	50	10	4200	5	7200
_52.1	52.1	6	0	4	500
_52.2	52.2	2	800	0	1000
_60	60	2	1100	1	1300
_70	70	3	1300	2	1500

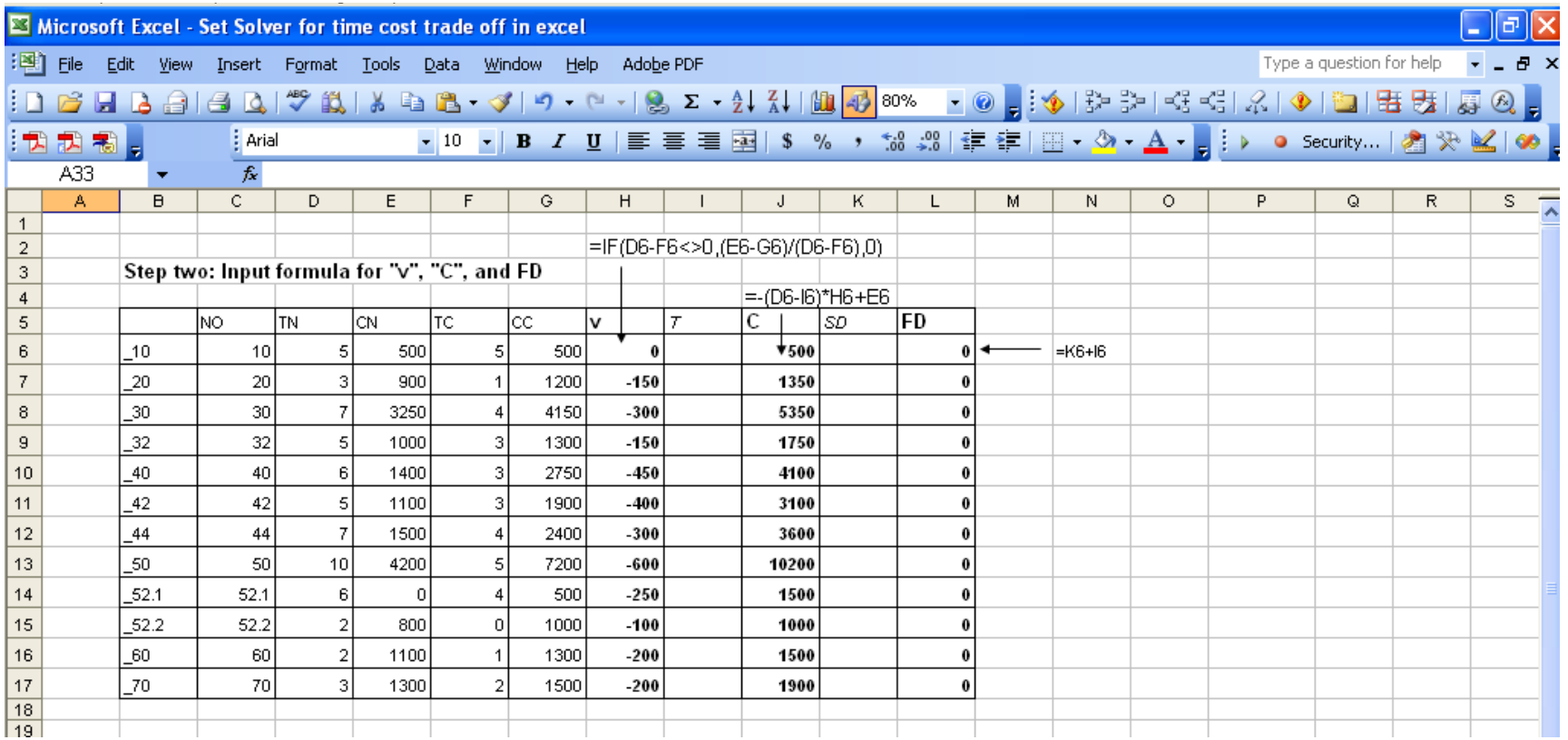

		NO	TN	CN	TC	CC	v	T	C	SD	FD
6	_10	10	5	500	5	500	0		500		0
7	_20	20	3	900	1	1200	-150		1350		0
8	_30	30	7	3250	4	4150	-300		5350		0
9	_32	32	5	1000	3	1300	-150		1750		0
10	_40	40	6	1400	3	2750	-450		4100		0
11	_42	42	5	1100	3	1900	-400		3100		0
12	_44	44	7	1500	4	2400	-300		3600		0
13	_50	50	10	4200	5	7200	-600		10200		0
14	_52.1	52.1	6	0	4	500	-250		1500		0
15	_52.2	52.2	2	800	0	1000	-100		1000		0
16	_60	60	2	1100	1	1300	-200		1500		0
17	_70	70	3	1300	2	1500	-200		1900		0

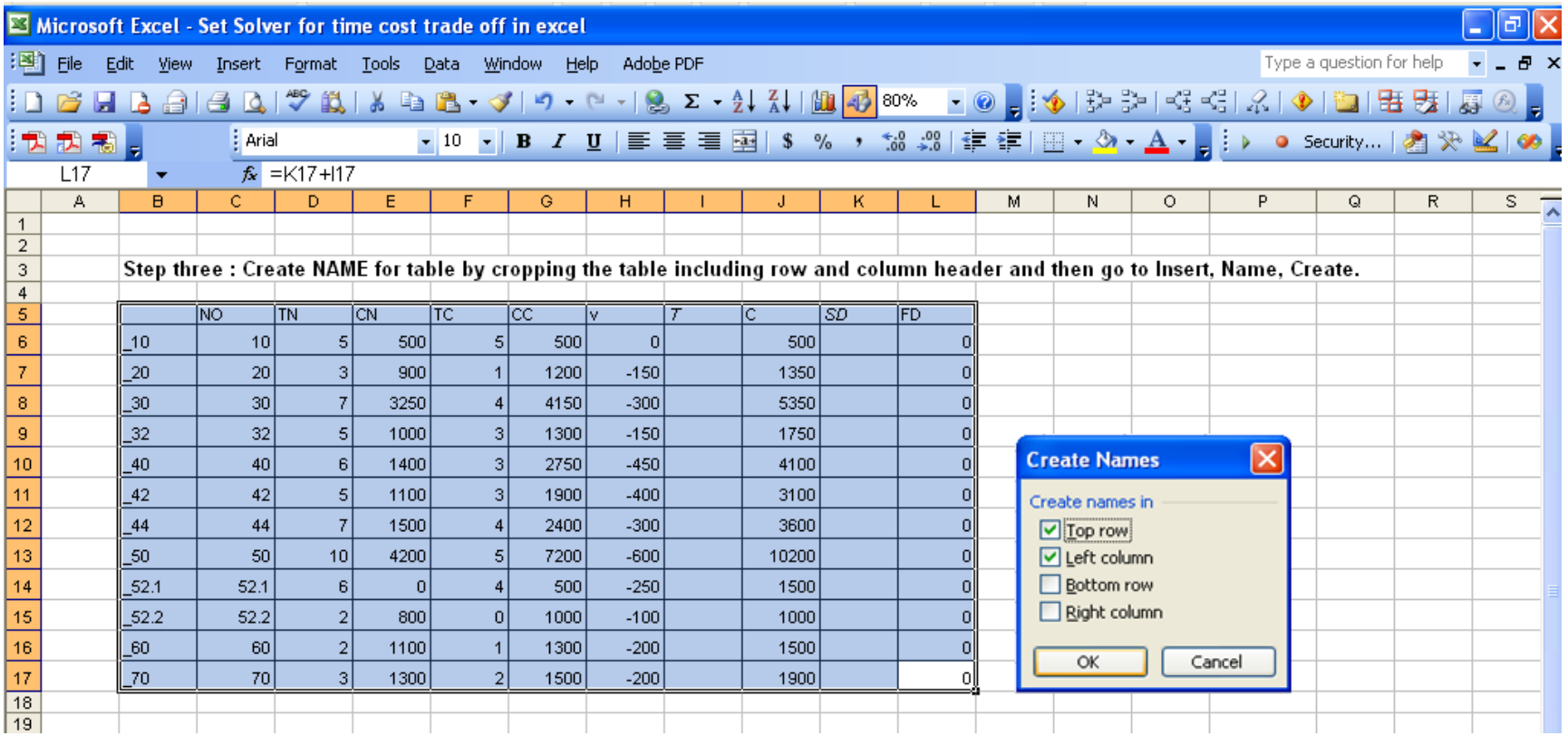

	NO	TN	CN	TC	CC	v	T	C	SD	FD
_10	10	5	500	5	500	0		500		0
_20	20	3	900	1	1200	-150		1350		0
_30	30	7	3250	4	4150	-300		5350		0
_32	32	5	1000	3	1300	-150		1750		0
_40	40	6	1400	3	2750	-450		4100		0
_42	42	5	1100	3	1900	-400		3100		0
_44	44	7	1500	4	2400	-300		3600		0
_50	50	10	4200	5	7200	-600		10200		0
_52.1	52.1	6	0	4	500	-250		1500		0
_52.2	52.2	2	800	0	1000	-100		1000		0
_60	60	2	1100	1	1300	-200		1500		0
_70	70	3	1300	2	1500	-200		1900		0

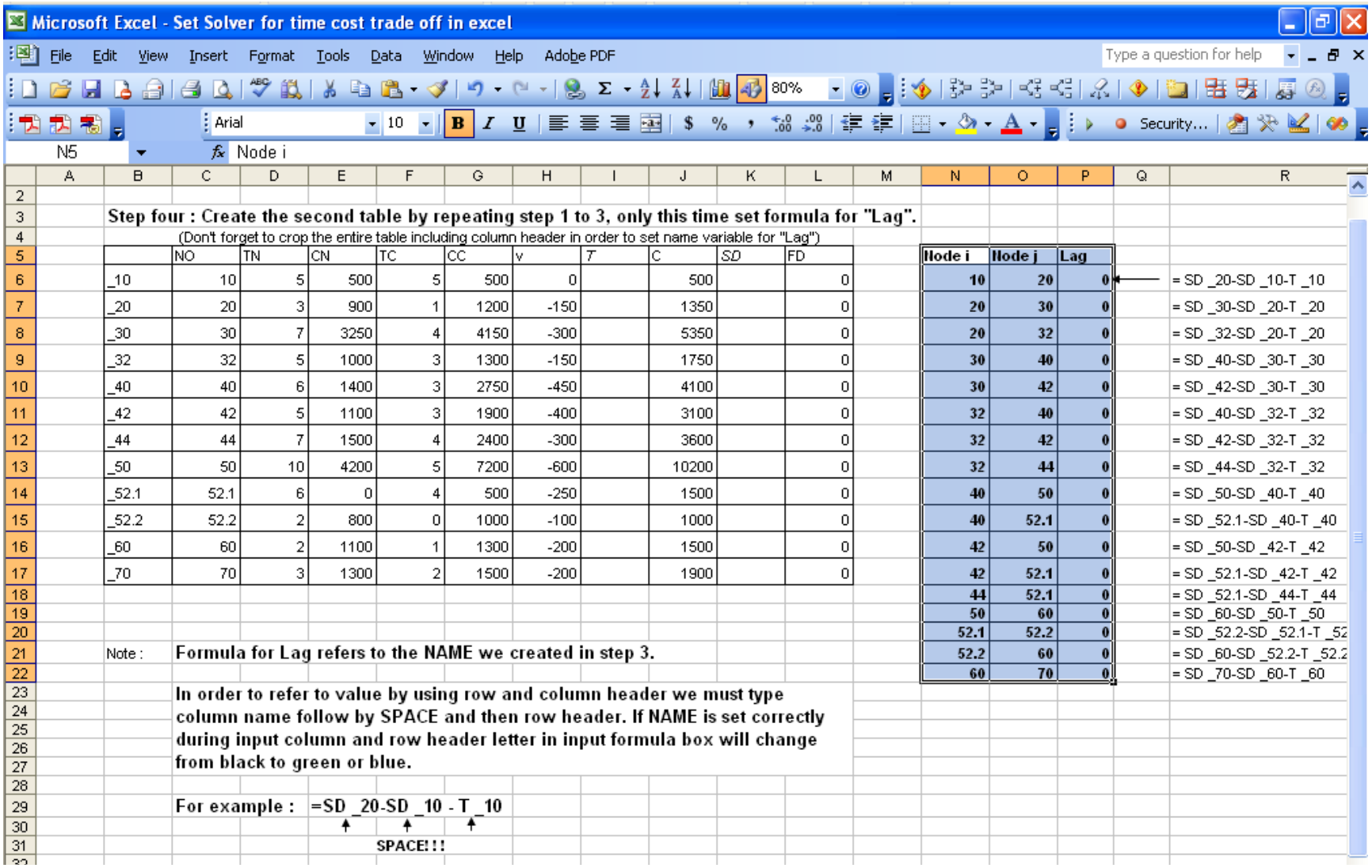

Step four : Create the second table by repeating step 1 to 3, only this time set formula for "Lag".

(Don't forget to crop the entire table including column header in order to set name variable for "Lag")

	NO	TN	CN	TC	CC	v	*T*	C	*SD*	FD
_10	10	5	500	5	500	0		500		0
_20	20	3	900	1	1200	-150		1350		0
_30	30	7	3250	4	4150	-300		5350		0
_32	32	5	1000	3	1300	-150		1750		0
_40	40	6	1400	3	2750	-450		4100		0
_42	42	5	1100	3	1900	-400		3100		0
_44	44	7	1500	4	2400	-300		3600		0
_50	50	10	4200	5	7200	-600		10200		0
_52.1	52.1	6	0	4	500	-250		1500		0
_52.2	52.2	2	800	0	1000	-100		1000		0
_60	60	2	1100	1	1300	-200		1500		0
_70	70	3	1300	2	1500	-200		1900		0

Node i	Node j	Lag	
10	20	0	= SD _20-SD _10-T _10
20	30	0	= SD _30-SD _20-T _20
20	32	0	= SD _32-SD _20-T _20
30	40	0	= SD _40-SD _30-T _30
30	42	0	= SD _42-SD _30-T _30
32	40	0	= SD _40-SD _32-T _32
32	42	0	= SD _42-SD _32-T _32
32	44	0	= SD _44-SD _32-T _32
40	50	0	= SD _50-SD _40-T _40
40	52.1	0	= SD _52.1-SD _40-T _40
42	50	0	= SD _50-SD _42-T _42
42	52.1	0	= SD _52.1-SD _42-T _42
44	52.1	0	= SD _52.1-SD _44-T _44
50	60	0	= SD _60-SD _50-T _50
52.1	52.2	0	= SD _52.2-SD _52.1-T _52
52.2	60	0	= SD _60-SD _52.2-T _52.2
60	70	0	= SD _70-SD _60-T _60

Note : **Formula for Lag refers to the NAME we created in step 3.**

In order to refer to value by using row and column header we must type column name follow by SPACE and then row header. If NAME is set correctly during input column and row header letter in input formula box will change from black to green or blue.

For example : =SD _20-SD _10 - T _10

SPACE!!!

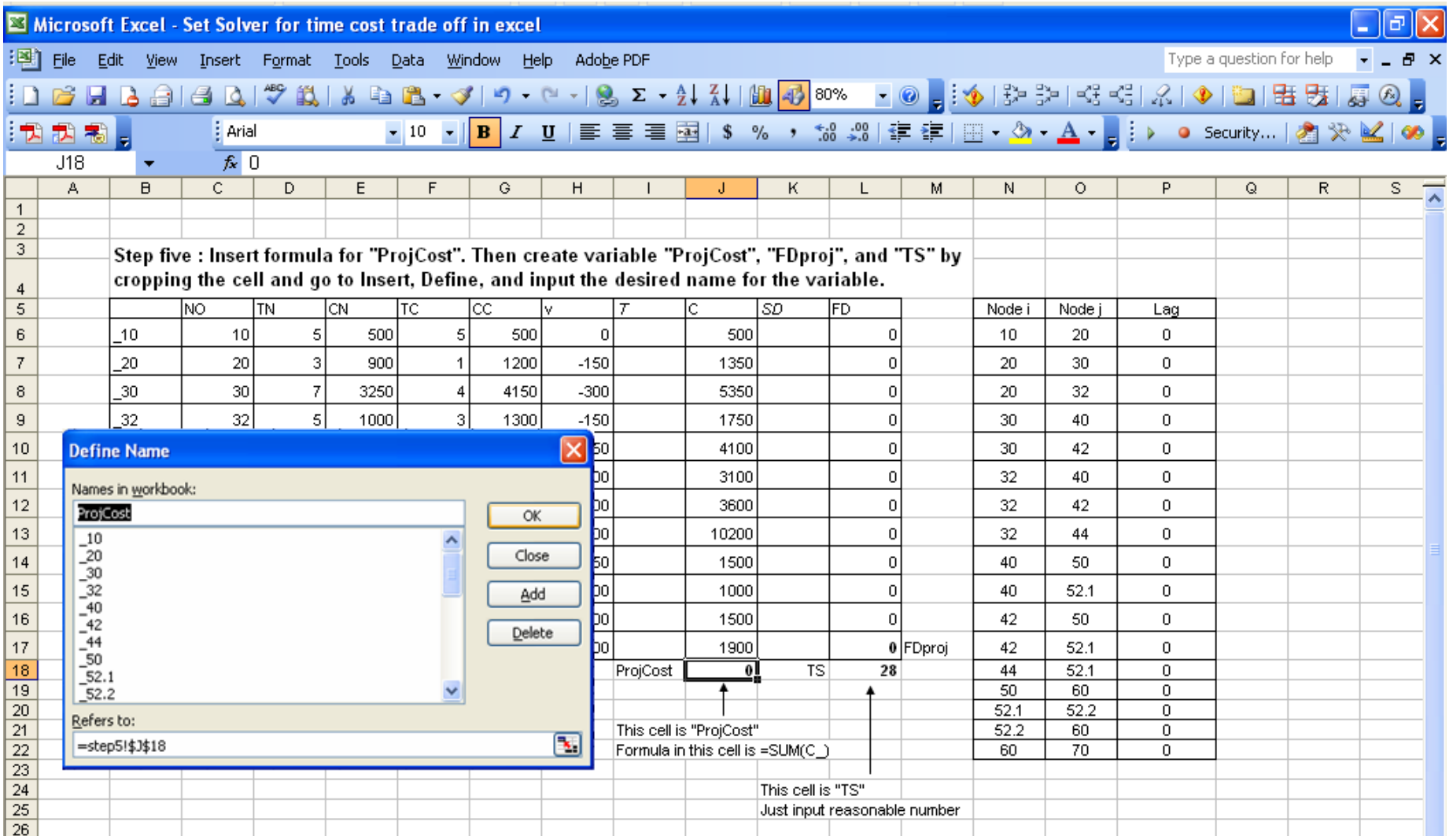
Microsoft Excel - Set Solver for time cost trade off in excel
File Edit View Insert Format Tools Data Window Help Adobe PDF
Type a question for help
Arial 10
J18
0
Step five : Insert formula for "ProjCost". Then create variable "ProjCost", "FDproj", and "TS" by cropping the cell and go to Insert, Define, and input the desired name for the variable.
NO TN CN TC CC v T C SD FD
_10 10 5 500 5 500 0 500 0
_20 20 3 900 1 1200 -150 1350 0
_30 30 7 3250 4 4150 -300 5350 0
_32 32 5 1000 3 1300 -150 1750 0
4100 0
3100 0
3600 0
10200 0
1500 0
1000 0
1500 0
1900 0 FDproj
ProjCost 0 TS 28
Node i Node j Lag
10 20 0
20 30 0
20 32 0
30 40 0
30 42 0
32 40 0
32 42 0
32 44 0
40 50 0
40 52.1 0
42 50 0
42 52.1 0
44 52.1 0
50 60 0
52.1 52.2 0
52.2 60 0
60 70 0
Define Name
Names in workbook:
ProjCost
_10
_20
_30
_32
_40
_42
_44
_50
_52.1
_52.2
OK
Close
Add
Delete
Refers to:
=step5!J18
This cell is "ProjCost"
Formula in this cell is =SUM(C_)
This cell is "TS"
Just input reasonable number

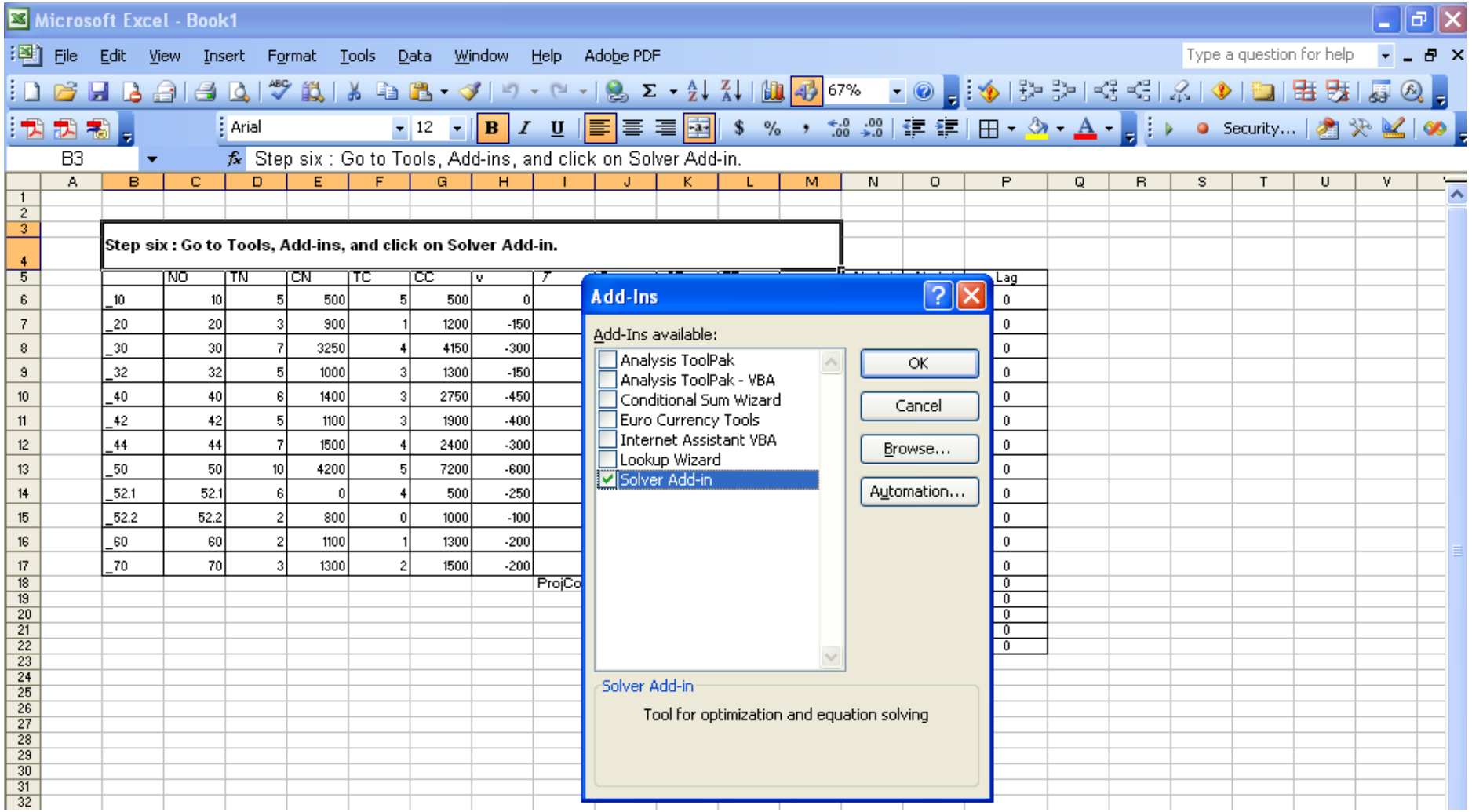

	NO	TN	CN	TC	CC	v	Lag
_10	10	5	500	5	500	0	0
_20	20	3	900	1	1200	-150	0
_30	30	7	3250	4	4150	-300	0
_32	32	5	1000	3	1300	-150	0
_40	40	6	1400	3	2750	-450	0
_42	42	5	1100	3	1900	-400	0
_44	44	7	1500	4	2400	-300	0
_50	50	10	4200	5	7200	-600	0
_52.1	52.1	6	0	4	500	-250	0
_52.2	52.2	2	800	0	1000	-100	0
_60	60	2	1100	1	1300	-200	0
_70	70	3	1300	2	1500	-200	0

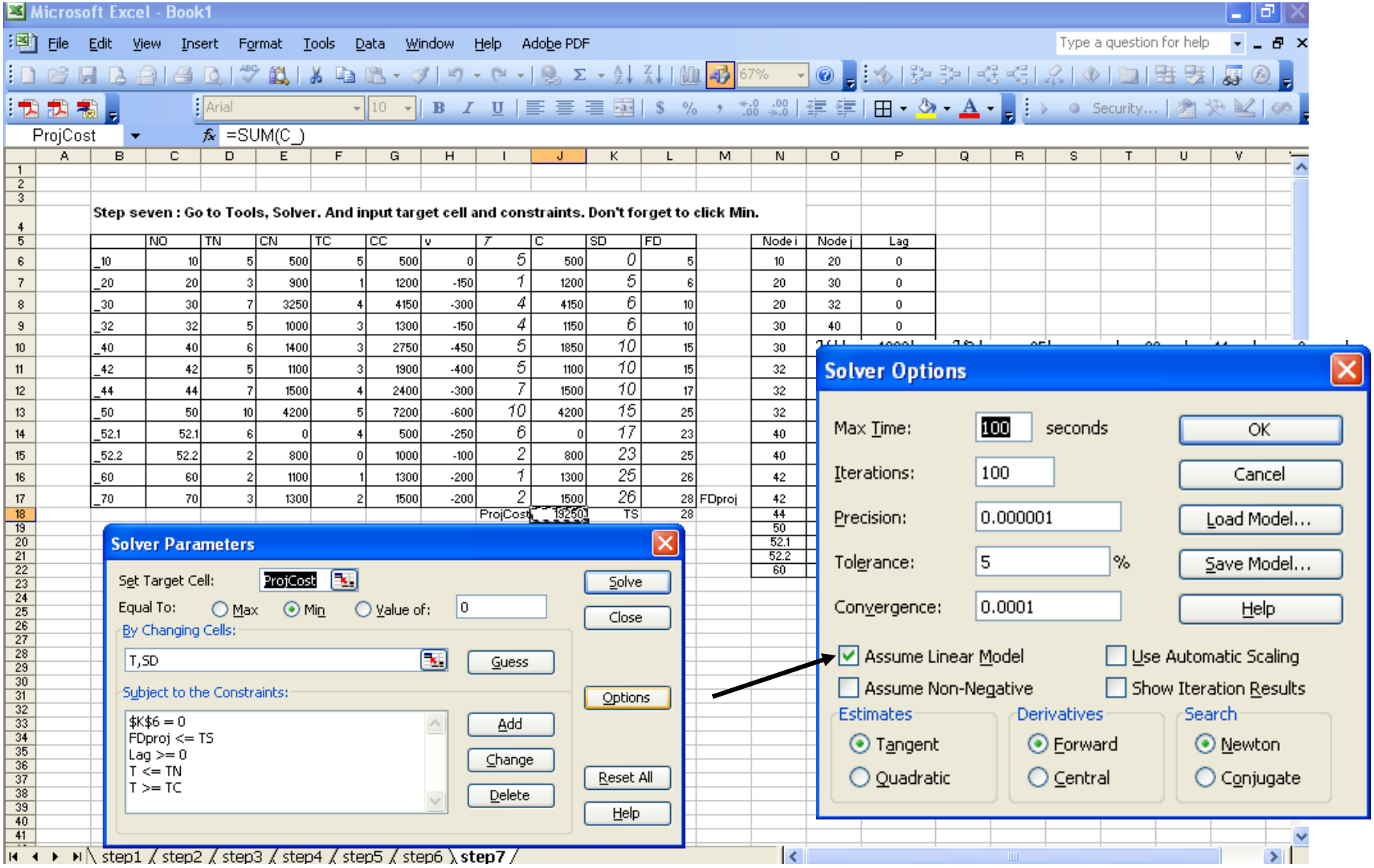

Step seven : Go to Tools, Solver. And input target cell and constraints. Don't forget to click Min. Then click Options and click on Assume Linear Model....FINALLY click Solve

9. RESOUCE LEVELING

- MINIMUM MOMENT METHOD

Resource Leveling

In this section, the two concepts of resource leveling, Minimum Moment Method and PACK, are discussed. First let's take a look at the network diagram below consisting of 7 activities. As shown in the bar chart and resource profile, if activities are scheduled at their early start date (ESD), this project requires the MAXIMUM RESOURCE of SIX on day 5 and 6. On the other hand, this schedule will use only ONE resource on day 8, 9, and 10. This fluctuation of resource profile may result in difficulty in managing resource. Consequently, it adversely affects the project.

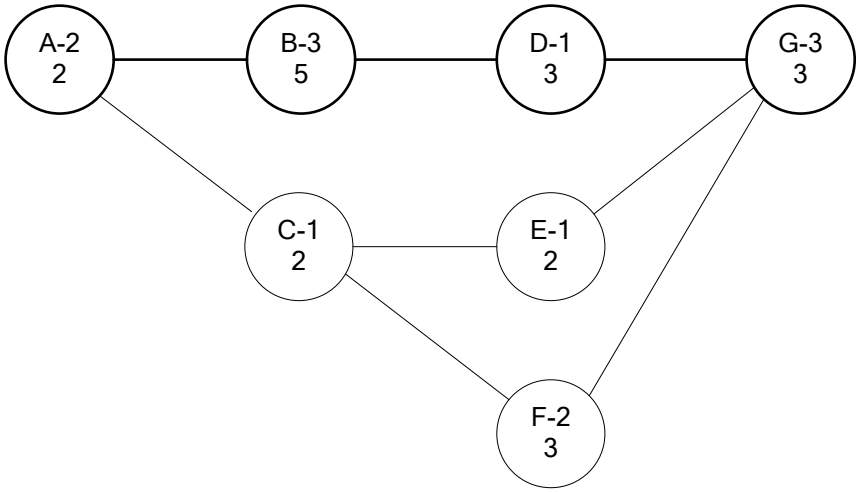

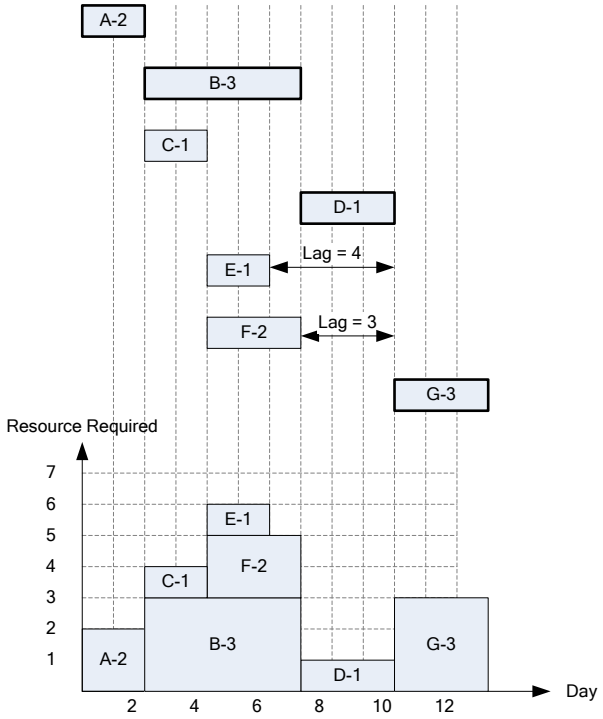

Now, look at the new resource profile after it is leveled. As you can see, maximum resource required reduces from 6 to 4 without increasing project duration. You may wonder what if we apply limited resource allocation with maximum resource available of 4. Well, hopefully the next 3 questions and answers will make my point clearer.

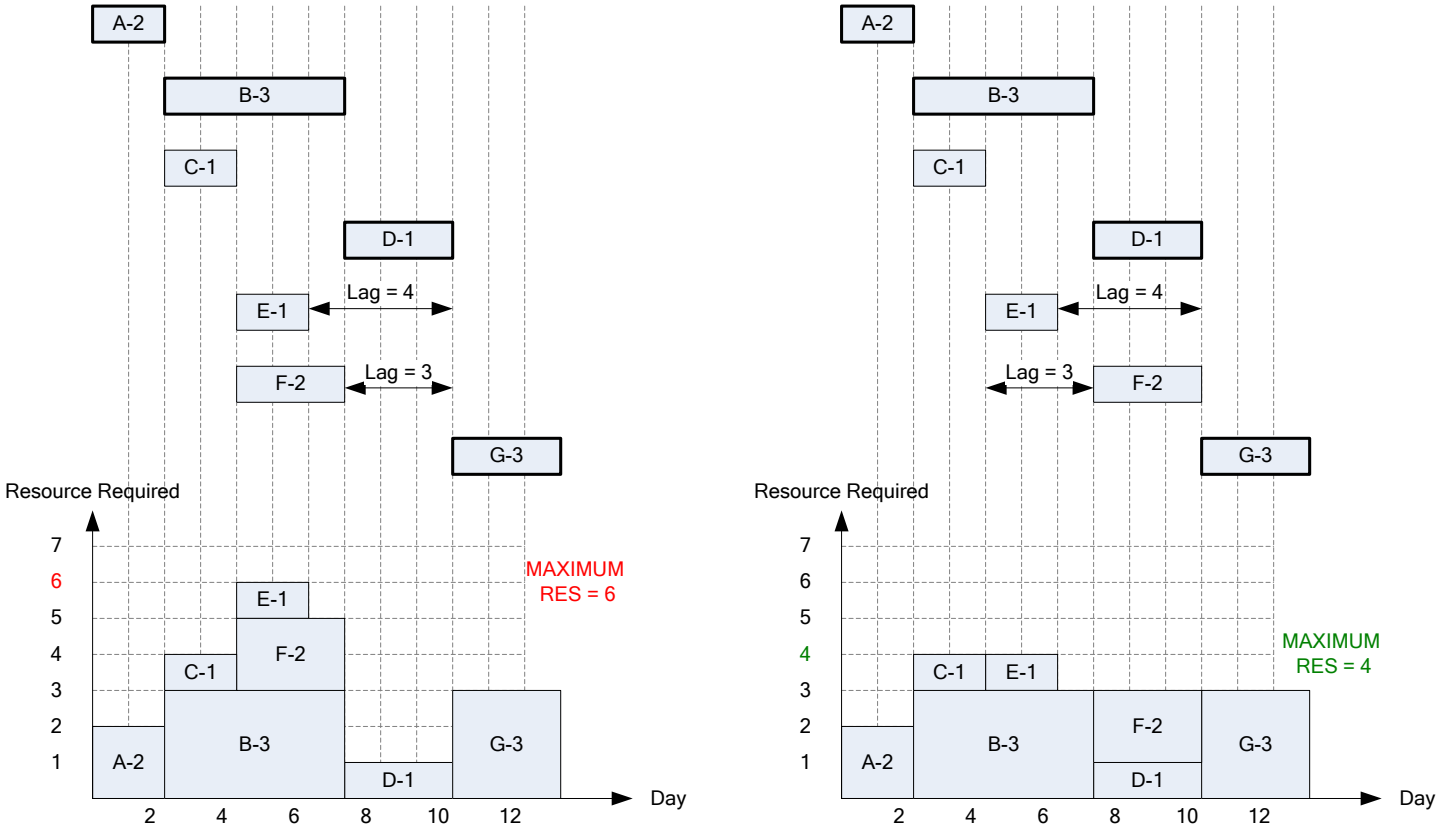

Question 1: So, what is the main focus here?

Answer 1.1: Reduce fluctuation in resource profile, while project duration remains the same. ☺

Question 2: Why don't just use Limited Resource Allocation?

Answer 2.1: Limited resource allocation doesn't directly solve the problem of fluctuation. The maximum resource required may change but the resource profile could STILL be fluctuated.

Answer 2.2: Applying limited resource allocation might increase project duration. We don't want to delay the project!!

Answer 2.3: We may not really have "the maximum number of available resource" yet.

Question 3: So! What do we do?

Answer 3: Minimum Moment Method (MOM) or PACK.

One last time, I want to point out the followings

1) Unlimited resource leveling reduces fluctuation in resource profile.
2) Unlimited resource leveling never delays critical activities.
3) Accordingly, unlimited resource leveling never increases project duration.

Before going into detail, I want to give you a big picture of these 2 resource leveling methods.

PRIORITY OF NON-CRITICAL ACTIVITIES

In MOM, calculation starts from the LAST sequence step. This means non-critical activities in the LATER sequence step have higher priority than those in the EARLIER sequence step. Then, what is called "Improvement Factor" is used to prioritize non-critical activities in the same sequence step.

In PACK, it just goes right at the problem. It takes all the non-critical activities out of resource profile (this method is hardcore). And then, place them one by one in the order of MAX to MIN number of resource required. Activity requiring more resource has higher priority than activity needs less resource (this is actually a smart way). As shown in PACK picture, non-critical activities are removed from resource profile. Then, they are positioned one by one at a time.

Minimum Moment Method (MOM)

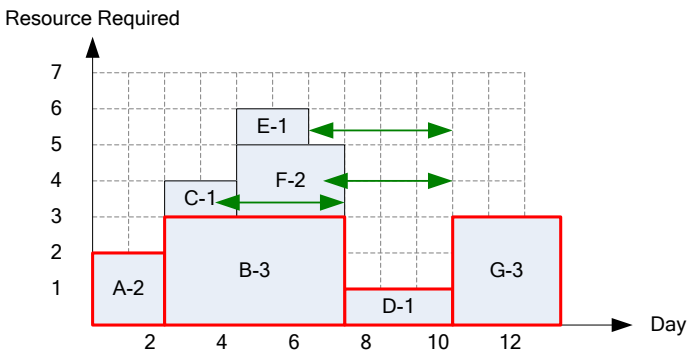

PACK

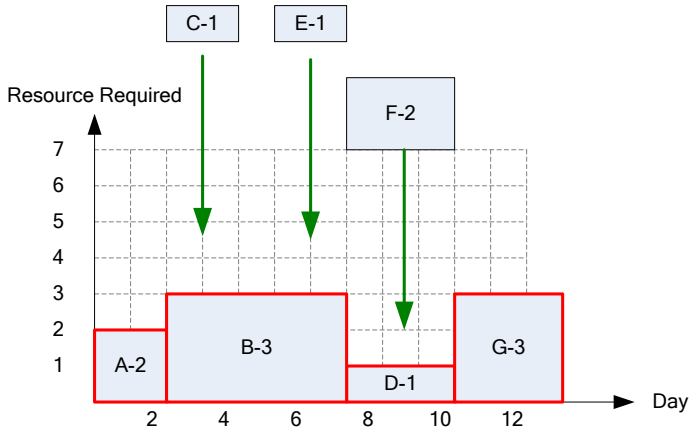

MEASUREMENT OF RESOURCE PROFILE

For both methods, a parameter called RIC is used in order to determine the **OVERALL** improvement in resource profile after leveling.

$$RIC = \frac{n\sum R^2}{\left(\sum R\right)^2}$$

n = project duration
R = Sum of resource required for a particular day

More about RIC can be found in Precedence and Arrow Networking Techniques for Construction by Robert B. Harris

Minimum Moment Method (MOM)

MOM uses a factor calls IMPROVEMENT FACTOR (IF) to measure the effectiveness of scheduling non-critical activity at different positions. **The greater the IF, the better it is.**

$$IF(Act\ ,\ S) = r(X - W - mr)$$

S = Number of shifting day (start from 1 to the minimum current lag of between the activity and its successors)

r = Number of resources required by the activity

X = Sum of resources in the range of the activity BEFORE shifting

W = Sum of resources in the range of the activity AFTER shifting

m = The minimum between S and T (duration of the activity).

See! The formula is very simple☺. Now let's solve the previous problem using MOM.

Here is 2 simple rules about shifting activity according to derived IF.

1) Negative value of IF is neglected. NO shifting.

2) Only shifting ONE activity with highest IF, one at a time.
   (NEVER SHIFT 2 ACTIVITIES IN THE SAME ROUND)
3) If there is a tie of IF in one activity, shifting the activity to the higher S.
   For example, IF(M,2) = 12 and IF (M,4) = 12
   Act M will be shifted by 4 days to give room for its predecessors (make sense, right)
4) If there is a tie of IF between two activities, shifting the activity with the higher resource require.
5) If there is more than one activity in a SQS, you probably have to recalculate IF for the 2nd round, AT LEAST.

Example on Minimum Moment Method (MOM)

Please level the below project using MOM.

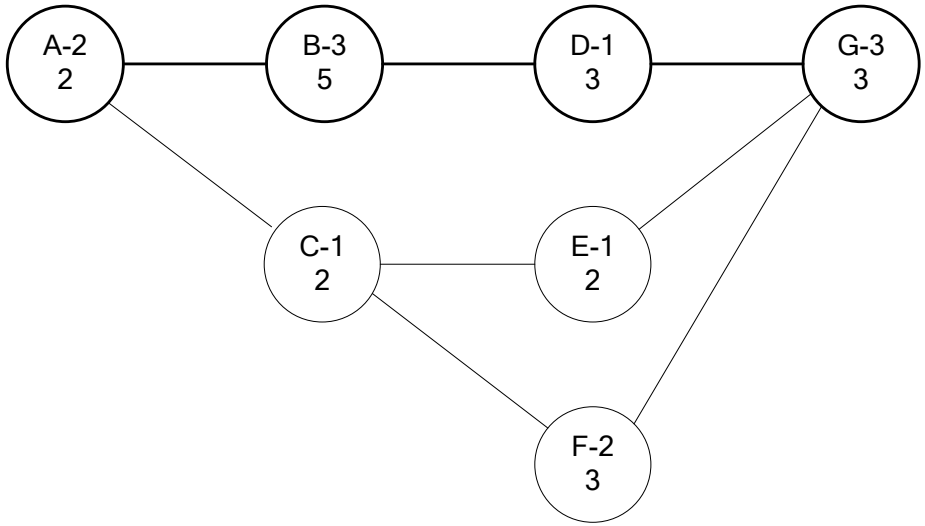

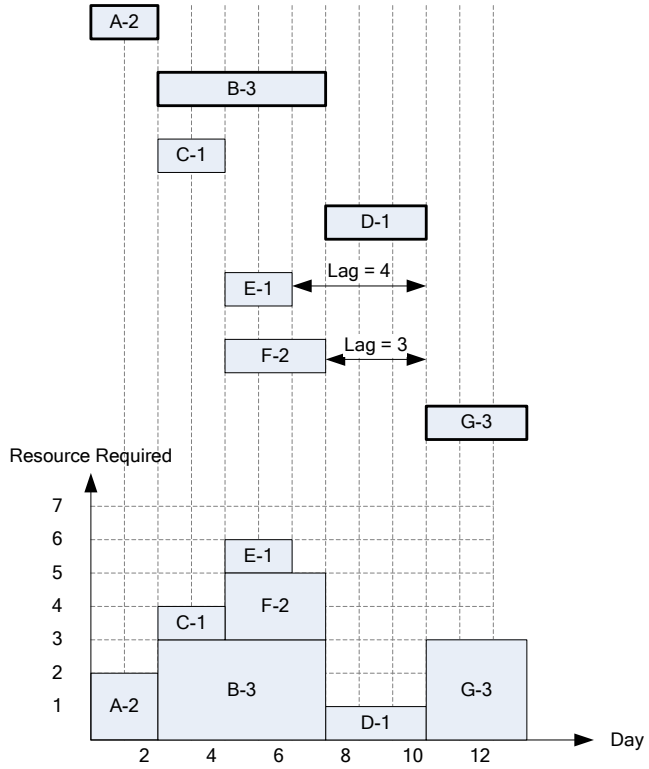

Sequence Step 4 Round 1.

First, we start from the last sequence step. However, since there is no non-critical activity in SQS 4, we move on SQS 3.

Sequence Step 3 Round 1.

FORWARD PASS: Showing the calculation of X and W for Act E in SQS 3 Round 1

X = Sum of Resources in the range of Act E BEFORE shifting = 6+6 = 12

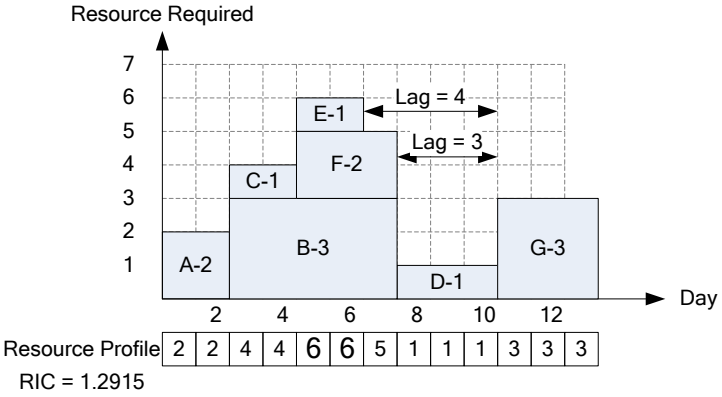

RIC = 1.2915

W of 1 shifting day = Sum of Resources in the range of Act E AFTER shifting by 1 day = 6+5 = 11

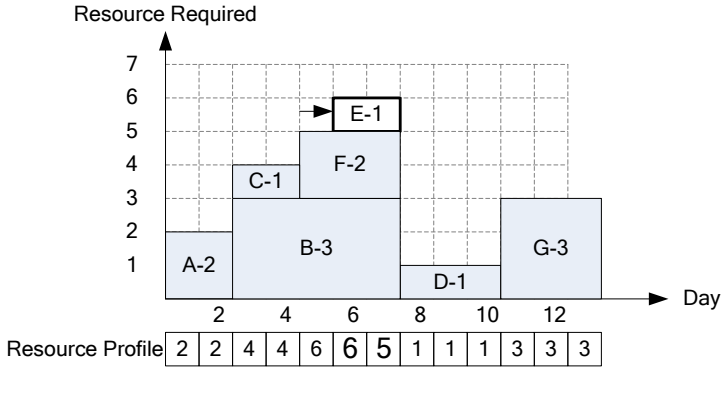

W of 2 shifting days = Sum of Resources in the range of Act E AFTER shifting by 2 days = 5+1 = 6

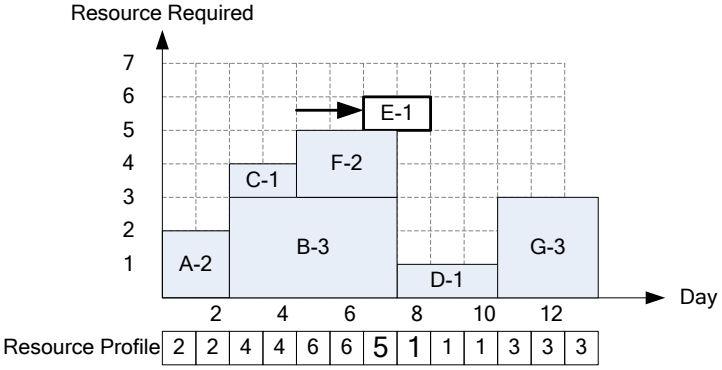

W of 3 shifting days = Sum of Resources in the range of Act E AFTER shifting by 3 days = 1+1 = 2

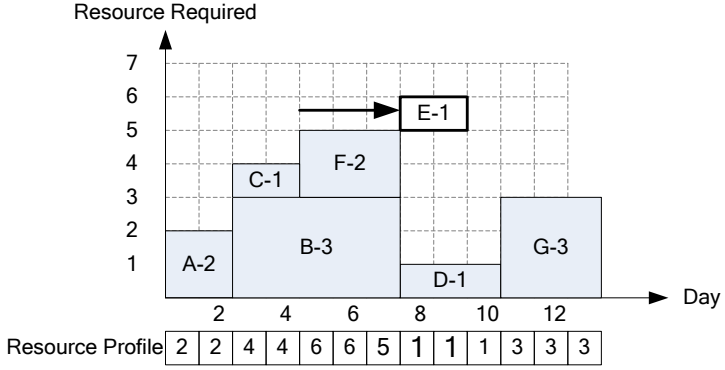

FORWARD PASS: Showing the calculation of X and W for Act F in SQS 3 Round 1

X = Sum of Resources in the range of Act F
BEFORE shifting = 6+6+5 = 17

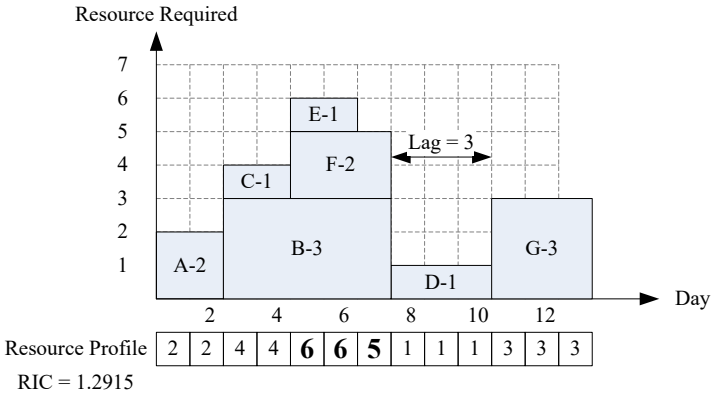

RIC = 1.2915

W of **1 shifting day** = Sum of Resources in the range of Act F **AFTER shifting by 1 day** = 6+5+1 = 12

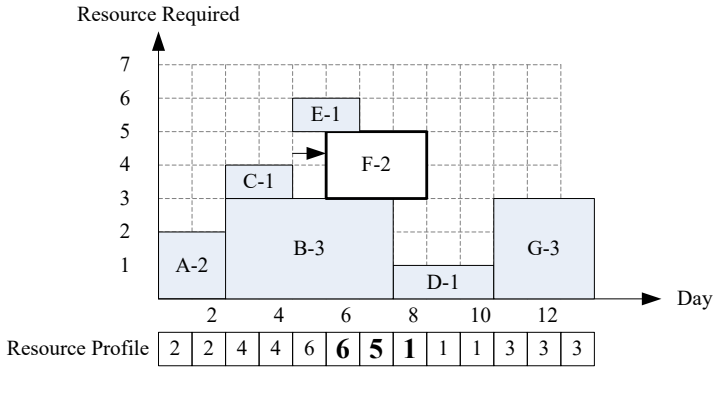

W of **2 shifting days** = Sum of Resources in the range of Act F **AFTER shifting by 2 days** = 5+1+1 = 7

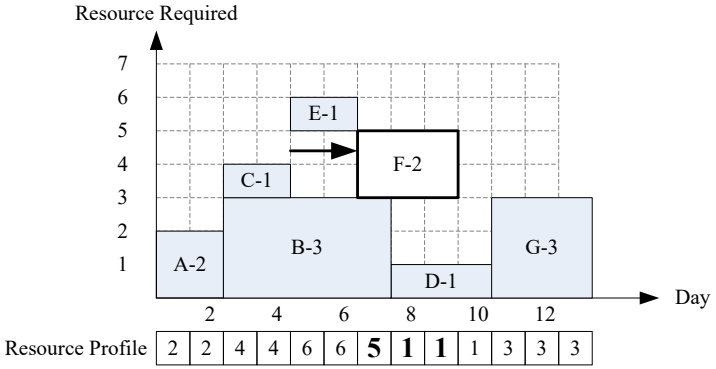

W of **3 shifting days** = Sum of Resources in the range of Act F **AFTER shifting by 3 days** = 1+1+1 = 3

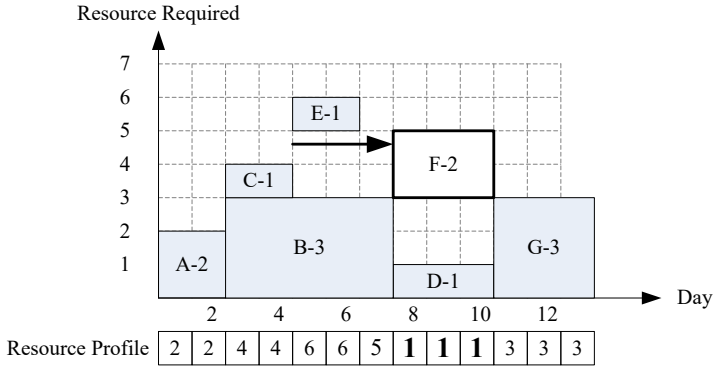

$IF(Act\ ,\ S) = r(X - W - mr)$

Act	S	r	X	W	m = min(S,T)	IF
E	1	1	6+6 = 12	6+5 = 11	1	0
E	2	1	12	5+1= 6	2	4
E	3	1	12	1+1 = 2	2	8
E	4	1	12	1+1 =2	2	8
F	1	2	6+6+5=17	6+5+1=12	1	6
F	2	2	17	5+1+1=7	2	12
F	3	2	17	1+1+1=3	3	**16**

According to the IF from the above table, Act F is shifted by 3 days, since it provides the max IF.

Note: IF of shifting E by 4 days equals to shifting it by 3 days. So, I didn't show it here. ☺

Sequence Step 3 Round 2. Since shifting F changes resource profile within the range of Act E, it is necessary to recalculate IF of E again. And see if there is positive value of IF. Don't forget to update the resource profile after shifting F!!

FORWARD PASS: Showing the calculation of X and W for Act E in SQS 3 Round 2

X = Sum of Resources in the range of Act E BEFORE shifting = 4+4 = 8

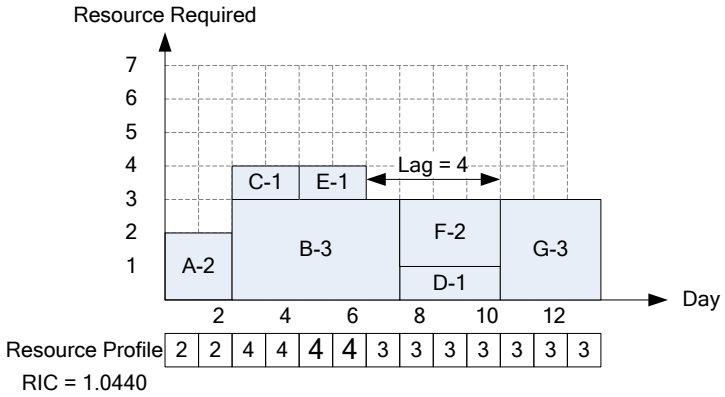

RIC = 1.0440

W of 1 shifting day = Sum of Resources in the range of Act E AFTER shifting by 1 day = 4+3 = 7

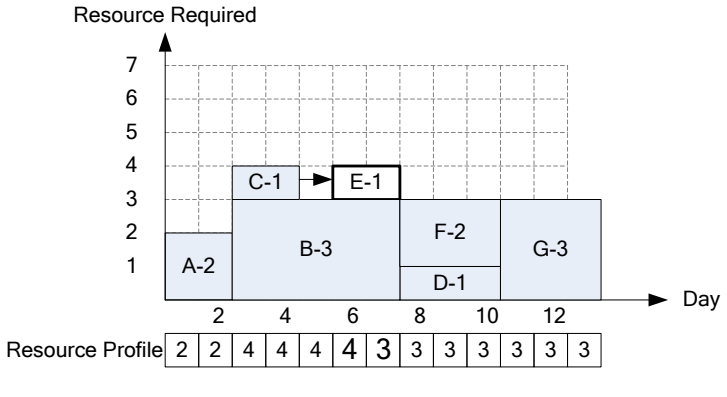

W of 2 shifting days = Sum of Resources in the range of Act E AFTER shifting by 2 days = 3+3 = 6

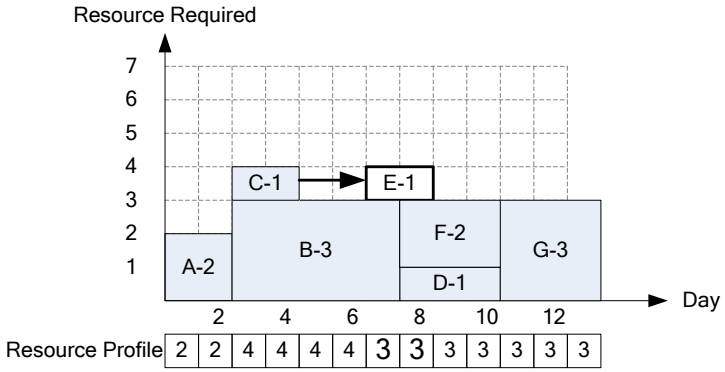

W of 3 shifting days = Sum of Resources in the range of Act E AFTER shifting by 3 days = 3+3 = 6

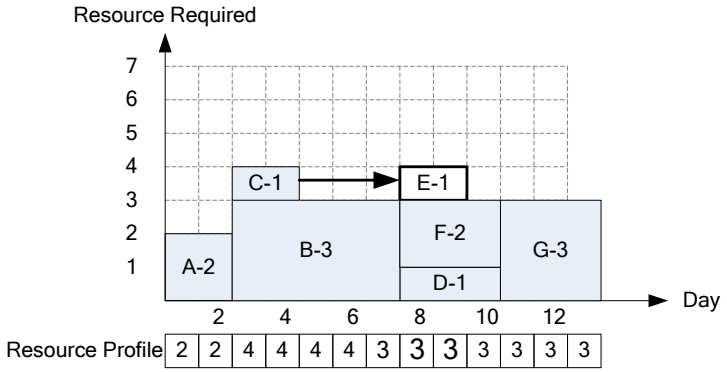

$$IF(Act\ ,\ S) = r(X - W - mr)$$

Act	S	r	X	W	m = min(S,T)	IF
E	1	1	4+4 = 8	4+3 = 7	1	0
E	2	1	8	3+3= 6	2	0
E	3	1	8	3+3 = 6	2	0
E	4	1	8	3+3 =6	2	0

Thus in SQS 3 Round 2, activity E is shifted by 4 days. **Why not shifting E by either 2 or 3 days since they have the same IF????**

Sequence Step 2 Round 1. Calculate IF of Act C. Don't forget to update the resource profile after shifting E!!

FORWARD PASS: Showing the calculation of X and W for Act C in SQS 2 Round 1

X = Sum of Resources in the range of Act C BEFORE shifting = 4+4 = 8

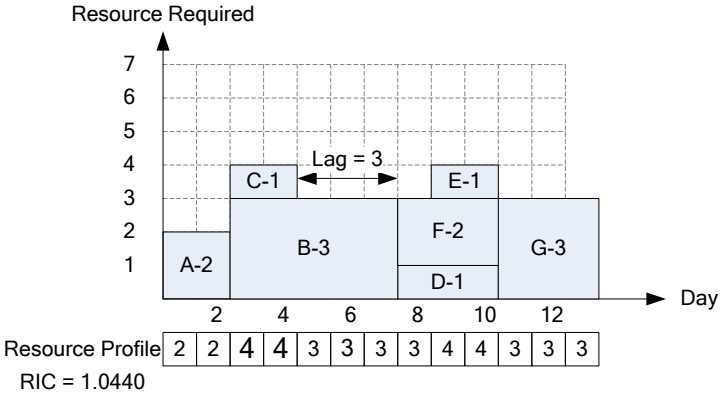

RIC = 1.0440

W of 1 shifting day = Sum of Resources in the range of Act C AFTER shifting by 1 day = 4+3 = 7

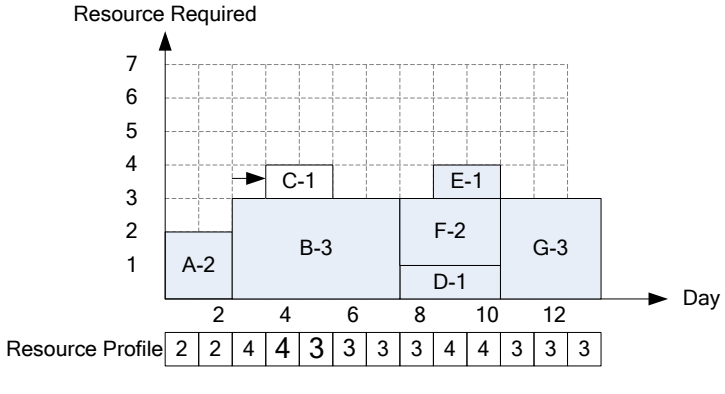

W of 2 shifting days = Sum of Resources in the range of Act C AFTER shifting by 2 days = 3+3 = 6

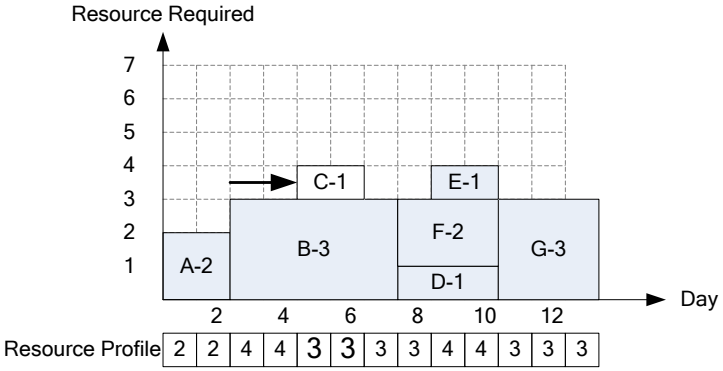

W of 3 shifting days = Sum of Resources in the range of Act C AFTER shifting by 3 days = 3+3 = 6

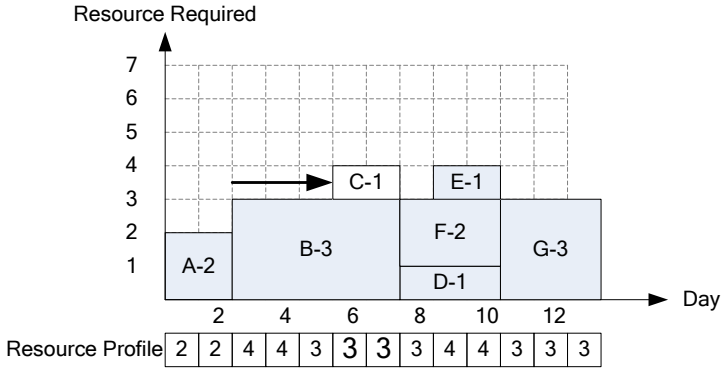

Act	S	r	X	W	m = min(S,T)	IF

C	1	1	4+4 = 8	4+3 = 7	1	0
C	2	1	8	3+3= 6	2	0
C	3	1	8	3+3 = 6	2	0

Thus, shift Act C by 3 days.
Sequence Step 1 Round 1. There is no non-critical activity in this SQS.

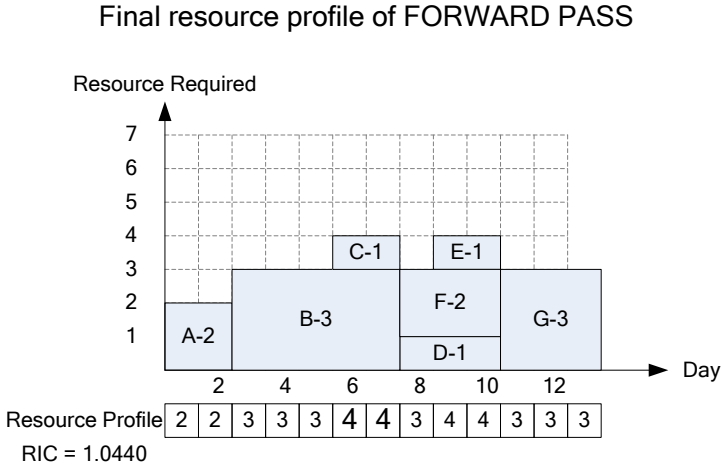

At this point, we have finished the forward pass. However, we have to repeat the process again in the opposite way, called BACKWARD PASS. The reason for this is to:

1) To check and improve resource profile
2) To check if activities can gain some floats back without increasing RIC (or fluctuation)

The process of BACKWARD PASS is exactly the same as FORWARD PASS, only this time the calculation start from the first sequence step to the last step, and activities are shifted from the right to left.

Backward Pass: Sequence Step 1. There is no non-critical activity.

Backward Pass: Sequence Step 2 Round 1. Calculate IF of Act C.

BACKWARD PASS: Showing the calculation of X and W for Act C in SQS 2 Round 1

X = Sum of Resources in the range of Act C BEFORE shifting = 4+4 = 8

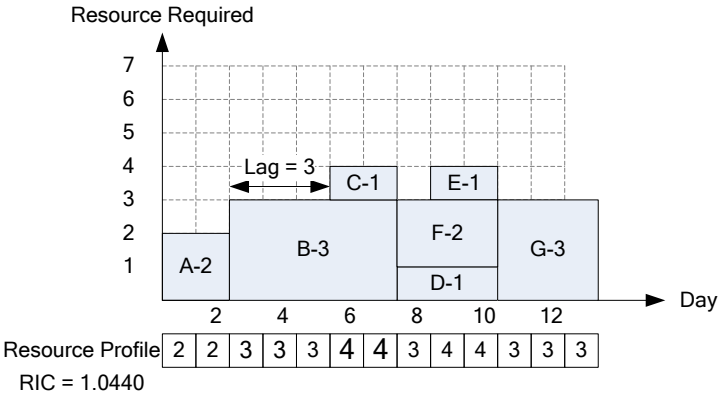

RIC = 1.0440

W of 1 shifting day = Sum of Resources in the range of Act C AFTER shifting by 1 day = 4+3 = 7

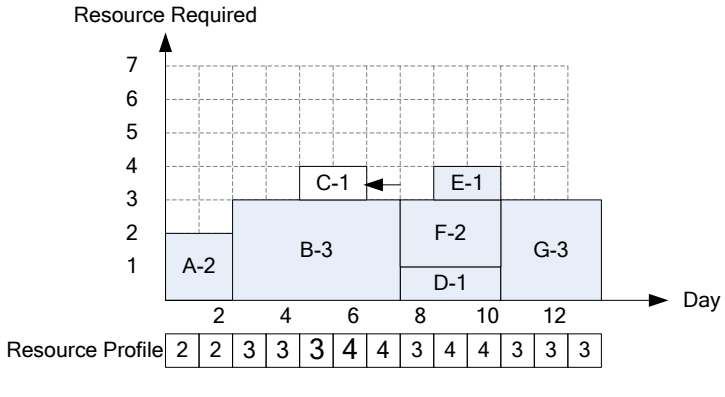

W of 2 shifting days = Sum of Resources in the range of Act C AFTER shifting by 2 days = 3+3 = 6

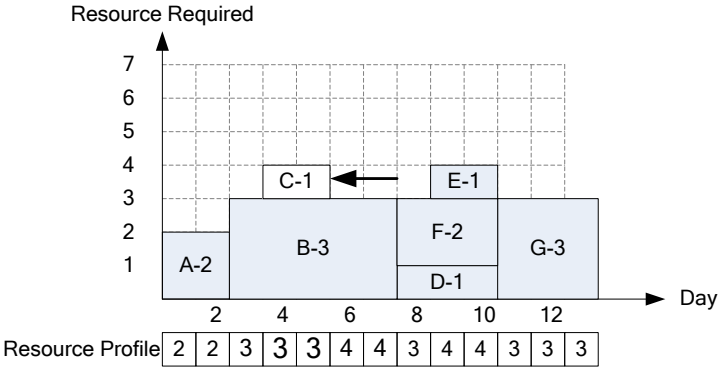

W of 3 shifting days = Sum of Resources in the range of Act C AFTER shifting by 3 days = 3+3 = 6

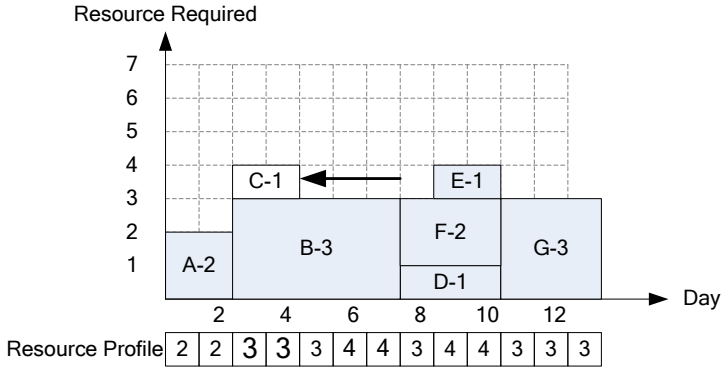

Act	S	r	X	W	m = min(S,T)	IF
C	1	1	4+4 = 8	4+3 = 7	1	0
C	2	1	8	3+3= 6	2	0
C	3	1	8	3+3 = 6	2	0

Thus, shift Act C to the left by 3 days. New RIC = 1.0440.

As you can see, RIC is the same. However, activity C gains some floats back.

Backward Pass: Sequence Step 3 Round 1.
Calculate IF of Act E and F.

BACKWARD PASS: Showing the calculation of X and W for Act E in SQS 3 Round 1

X = Sum of Resources in the range of Act E BEFORE shifting = 4+4 = 8

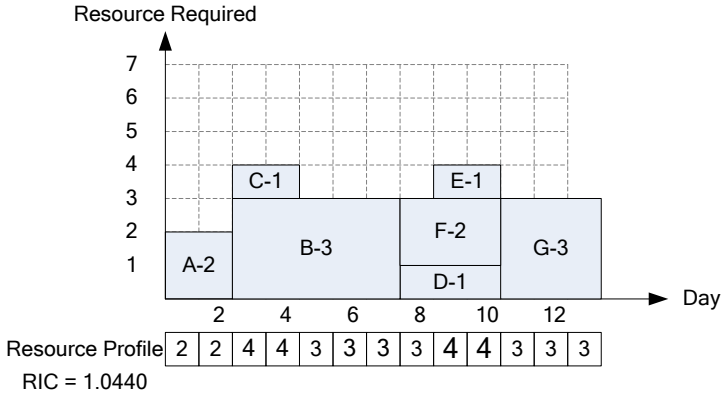

W of 1 shifting day = Sum of Resources in the range of Act E AFTER shifting by 1 day = 3+4 = 7

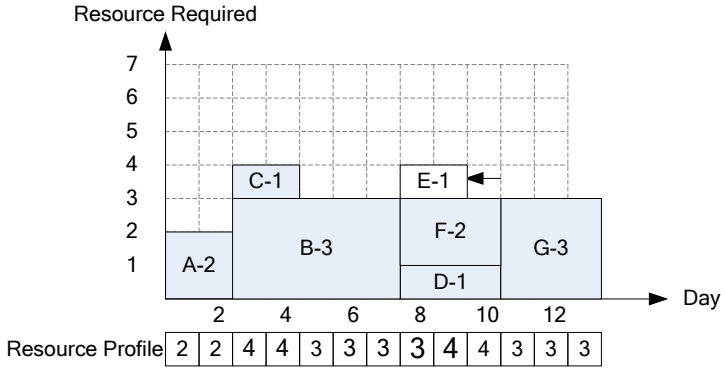

W of 2 shifting days = Sum of Resources in the range of Act E AFTER shifting by 2 days = 3+3 = 6

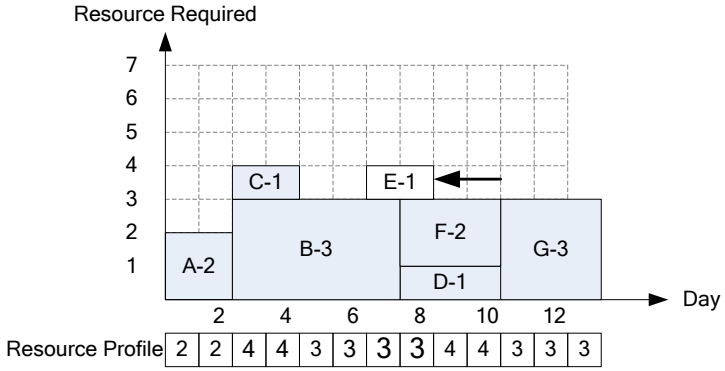

W of 3 shifting days = Sum of Resources in the range of Act E AFTER shifting by 3 days = 3+3 = 6

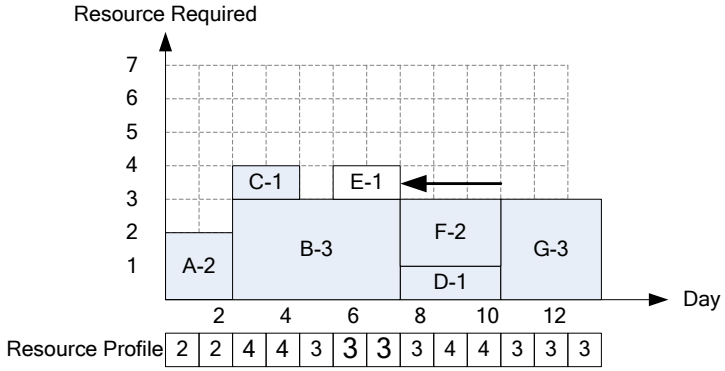

Note that IF of shifting Act E by 4 days is the same as shifting E by 3 days.

BACKWARD PASS: Showing the calculation of X and W for Act F in SQS 3 Round 1

X = Sum of Resources in the range of Act F BEFORE shifting = 3+4+4 = 11

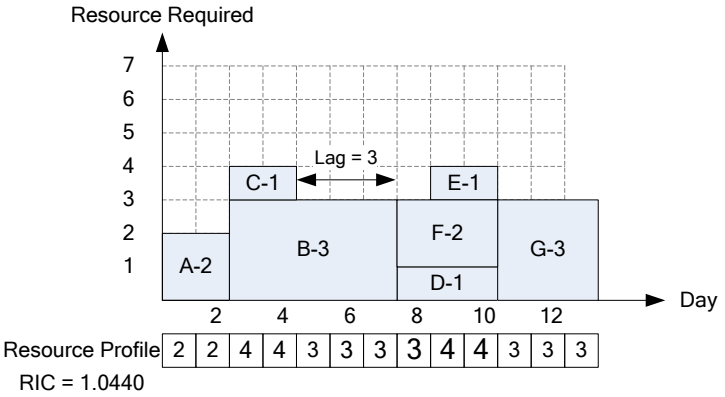

W of 1 shifting day = Sum of Resources in the range of Act F AFTER shifting by 1 day = 3+3+4 = 10

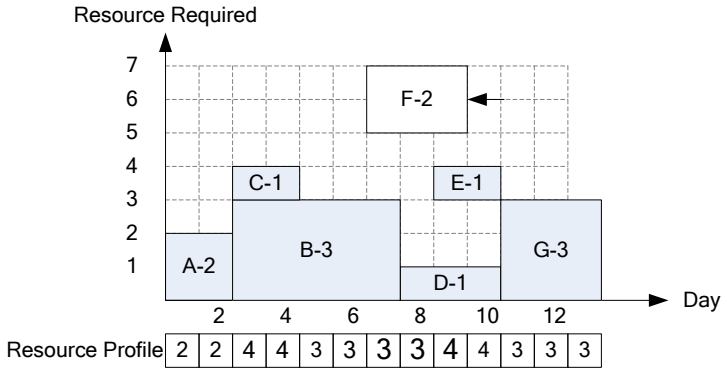

W of 2 shifting days = Sum of Resources in the range of Act F AFTER shifting by 2 days = 3+3+3 = 9

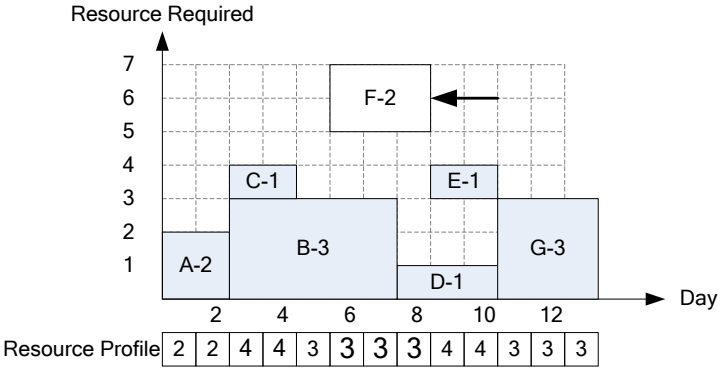

W of 3 shifting days = Sum of Resources in the range of Act F AFTER shifting by 3 days = 3+3+3 = 9

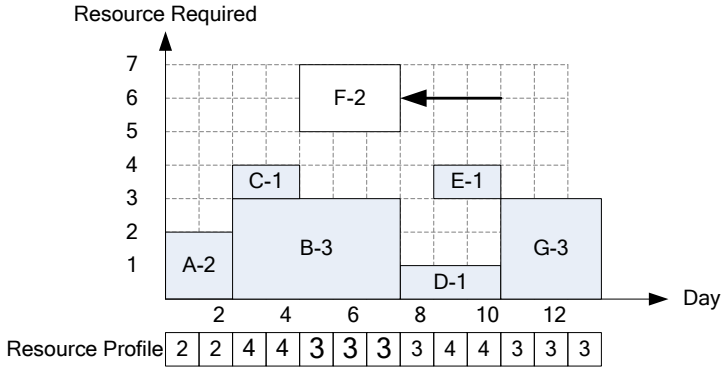

Act	S	r	X	W	m = min(S,T)	IF
E	1	1	4+4 = 8	4+3 = 7	1	0
E	2	1	8	3+3= 6	2	0
E	3	1	8	3+3 = 6	2	0
E	4	1	8	3+3 =6	2	**0**
F	1	2	4+4+3=10	4+3+3=10	1	-4
F	2	2	10	3+3+3=9	2	-6
F	3	2	10	1+3+3=9	3	-10

Thus, shift Act E backward by 4 days.

Backward Pass: Sequence Step 3 Round 2.

Calculate IF of Act F.

BACKWARD PASS: Showing the calculation of X and W for Act F in SQS 3 Round 2

X = Sum of Resources in the range of Act F BEFORE shifting = 3+3+3 = 9

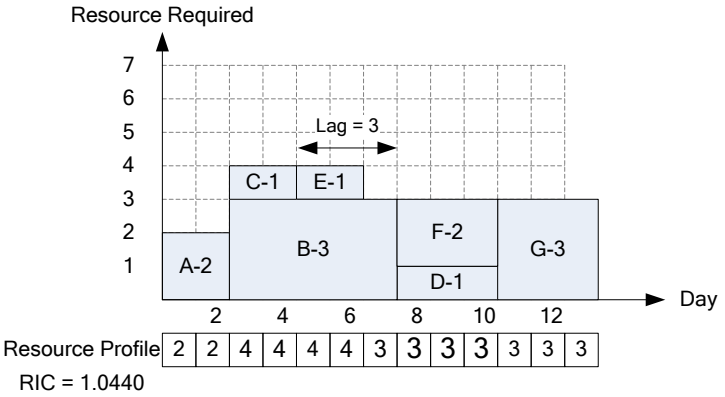

W of 1 shifting day = Sum of Resources in the range of Act F AFTER shifting by 1 day = 3+3+3 = 9

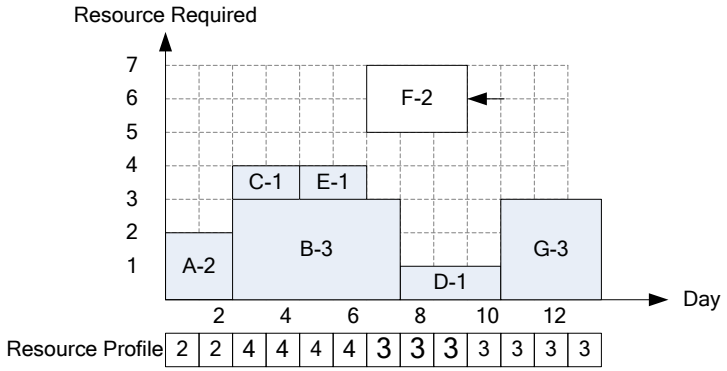

W of 2 shifting days = Sum of Resources in the range of Act F AFTER shifting by 2 days = 4+3+3 = 10

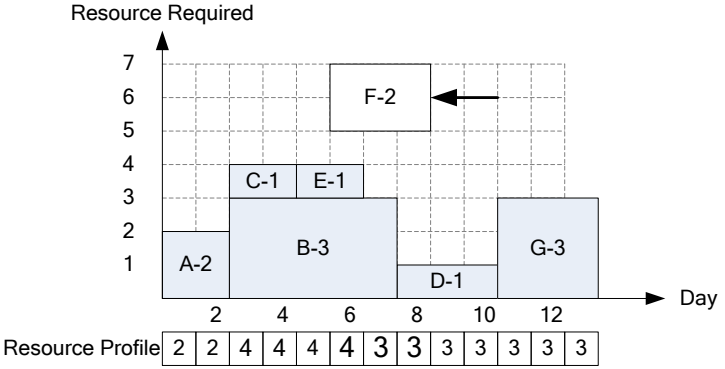

W of 3 shifting days = Sum of Resources in the range of Act F AFTER shifting by 3 days = 4+4+3 =11

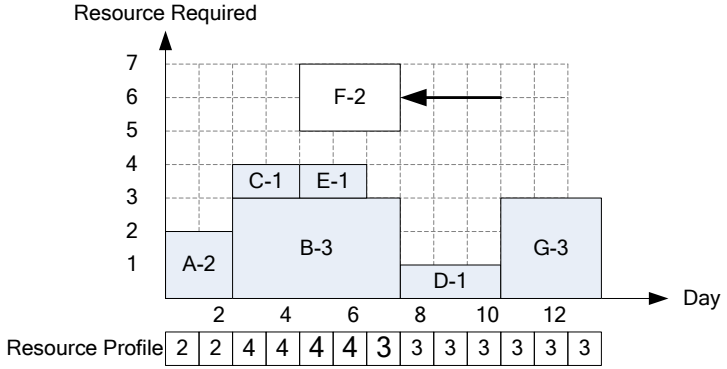

Act	S	r	X	W	m = min(S,T)	IF
F	1	2	3+3+3 = 9	3+3+3 = 9	1	-4
F	2	2	9	4+3+4= 10	2	-10
F	3	2	9	4+4+3 = 11	3	-16

Since all IF of Act F are negative, Act F stays in the same position. Move on to SQS 4.

Backward Pass: Sequence Step 4. Since there is no non-critical activity in this SQS, The calculation of MOM ends here at the backward pass of the last sequence step. YEAH!! Eventually, we have solved this problem of resource leveling using MOM.

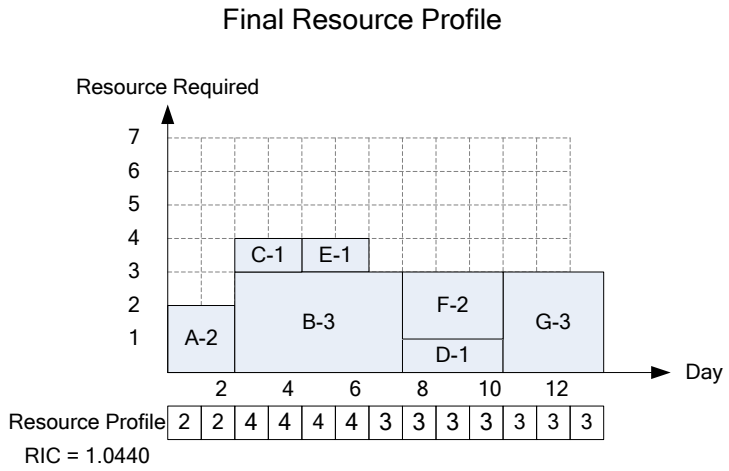

Problem 9.1 Leveling the following network using Minimum Moment Method (MOM)

Activity	Predecessors	Duration	Resource Rate
A		6	5
B	A	2	7
C	A	11	2
D	A	3	4
E	B	5	4
F	B,C	4	5
G	B	2	9
H	E,F	5	3
I	D, F,G	4	6
J	C,G	3	5
K	H	4	0
L	H, I, J	4	3
M	K,L	7	7

Problem 9.2 Leveling the following network using Minimum Moment Method (MOM)

Activity	Predecessors	Duration	Resource Rate
A		2	7
B	A	3	2
C	A	5	2
D	B	2	3
E	B	4	1
F	C	3	2
G	C	10	2
H	E	4	5
I	E,F	2	3
J	D,H,I,G	3	6

Solution 9.1 Minimum Moment

Sequence Step 6. No activity can be shifted

Sequence Step 5. No activity can be shifted

SEQUENCE STEP 4 is very IMPORTANT please read carefully.

Sequence Step 4, there are 2 non-critical activities, I and J, that can be shifted. So calculate IF of activities I and J.

DAY	1	2	3	4	5	6	7	8	9	10	11	12	13	14	15	16	17	18	19	20	21	22	23	24	25	26	27	28	29	30	31	32	33	34	35	36	37
A	5	5	5	5	5	5																															
B							7	7																													
C							2	2	2	2	2	2	2	2	2	2	2																				
D							4	4	4																												
E									4	4	4	4	4																								
F																		5	5	5	5																
G									9	9																											
H																						3	3	3	3	3											
I																						6	6	6	6												
J																		5	5	5																	
K																											0	0	0	0							
L																											3	3	3	3							
M																															7	7	7	7	7	7	7
Res	5	5	5	5	5	5	13	13	19	15	6	6	6	2	2	2	2	10	10	10	5	9	9	9	9	3	3	3	3	3	7	7	7	7	7	7	7

RIC = 1.3126

ACT	S	r	X	W	m	IF
I	1	6	36	30	1	**0**
J	1	5	30	25	1	0
J	2	5	30	24	2	-20
J	3	5	30	23	3	-40
J	4	5	30	27	3	-60
J	5	5	30	27	3	-60
J	6	5	30	21	3	-30

Activity with the highest Improvement Factor will be shifted. In this sequence step 4 round 1, both IF(I,1) and IF(J1) have the same IF of 0. However, we only shift one activity at a time.

So we choose the activity with a **higher resource rate.** Thus, shift activity I by one day.
??? What If they both have the SAME resource rate.???? Please check your course pack.

Sequence Step 4 the 2nd round. Since shifting activity I affects resource profiles within the possible range of activity J, which can be shifted; day 18 to day 26. As shown, resource profiles on day 22 and 26 have changed due to shifting activity I. Thue, we have to recalculate IF of activity J.

DAY	1	2	3	4	5	6	7	8	9	10	11	12	13	14	15	16	17	18	19	20	21	22	23	24	25	26	27	28	29	30	31	32	33	34	35	36	37
A	**5**	**5**	**5**	**5**	**5**	**5**																															
B							7	7																													
C							**2**	**2**	**2**	**2**	**2**	**2**	**2**	**2**	**2**	**2**	**2**																				
D							4	4	4																												
E									4	4	4	4	4																								
F																		**5**	**5**	**5**	**5**																
G									9	9																											
H																						**3**	**3**	**3**	**3**	**3**											
I																							6	6	6	6											
J																		5	5	5																	
K																											**0**	**0**	**0**	**0**							
L																											**3**	**3**	**3**	**3**							
M																															7	7	7	7	7	7	7
RES	**5**	**5**	**5**	**5**	**5**	**5**	**13**	**13**	**19**	**15**	**6**	**6**	**6**	**2**	**2**	**2**	**2**	**10**	**10**	**10**	**5**	**3**	**9**	**9**	**9**	**9**	**3**	**3**	**3**	**3**	7	7	7	7	7	7	7

RIC = 1.3126

ACT	S	r	X	W	m	IF
J	1	5	30	25	1	0
J	2	5	30	18	2	**10**
J	3	5	30	17	3	-10
J	4	5	30	21	3	-30
J	5	5	30	27	3	-60
J	6	5	30	27	3	-60

Shift activity J by two days.

We do not have to check activity I again because it cannot be shifted any further from its current position.

Sequence step 3. Possibly shifted activities in Sequence Step 3 are E and G.

DAY	1	2	3	4	5	6	7	8	9	10	11	12	13	14	15	16	17	18	19	20	21	22	23	24	25	26	27	28	29	30	31	32	33	34	35	36	37
A	**5**	**5**	**5**	**5**	**5**	**5**																															
B							7	7																													
C							**2**	**2**	**2**	**2**	**2**	**2**	**2**	**2**	**2**	**2**	**2**																				
D							4	4	4																												
E									4	4	4	4	4																								
F																		**5**	**5**	**5**	**5**																
G									9	9																											
H																						**3**	**3**	**3**	**3**	**3**											
I																							6	6	6	6											
J																				5	5	5															
K																											**0**	**0**	**0**	**0**							
L																											**3**	**3**	**3**	**3**							
M																															**7**	**7**	**7**	**7**	**7**	**7**	**7**
RES	**5**	**5**	**5**	**5**	**5**	**5**	**13**	**13**	**19**	**15**	**6**	**6**	**6**	**2**	**2**	**2**	**2**	**5**	**5**	**10**	**10**	**8**	**9**	**9**	**9**	**9**	**3**	**3**	**3**	**3**	**7**	**7**	**7**	**7**	**7**	**7**	**7**

RIC = 1.3009

ACT	S	r	X	W	m	IF
E	1	4	52	35	1	52
E	2	4	52	22	2	88
E	3	4	52	18	3	88
E	4	4	52	14	4	88
E	5	4	52	13	5	76
E	6	4	52	16	5	64
E	7	4	52	24	5	32
E	8	4	52	32	5	0

ACT	S	r	X	W	m	IF
G	1	9	34	21	1	36
G	2	9	34	12	2	36
G	3	9	34	12	2	36
G	4	9	34	8	2	72
G	5	9	34	4	2	108
G	6	9	34	4	2	108
G	7	9	34	4	2	**108**
G	8	9	34	7	2	81
G	9	9	34	10	2	54

For activity G, there are three shift positions having IF of 108. Shift to the further most in order to give room to its direct and indirect predecessors in earlier sequence step. Thus, shift activity G by 7 days.

Sequence Step 3 the 2nd round. Since shifting activity G affects resource profile within possible range, activity E can be shifted, so we have to recalculate IF of activity E.

DAY	1	2	3	4	5	6	7	8	9	10	11	12	13	14	15	16	17	18	19	20	21	22	23	24	25	26	27	28	29	30	31	32	33	34	35	36	37
A	**5**	**5**	**5**	**5**	**5**	**5**																																
B							7	7																														
C							**2**	**2**	**2**	**2**	**2**	**2**	**2**	**2**	**2**	**2**	**2**																					
D							4	4	4																													
E									4	4	4	4	4																									
F																		**5**	**5**	**5**	**5**																
G																9	9																				
H																						**3**	**3**	**3**	**3**	**3**											
I																							6	6	6	6											
J																				5	5	5															
K																											**0**	**0**	**0**	**0**							
L																											**3**	**3**	**3**	**3**							
M																															**7**	**7**	**7**	**7**	**7**	**7**	**7**
RES	**5**	**5**	**5**	**5**	**5**	**5**	**13**	**13**	**10**	**6**	**6**	**6**	**6**	**2**	**2**	**11**	**11**	**5**	**5**	**10**	**10**	**8**	**9**	**9**	**9**	**9**	**3**	**3**	**3**	**3**	**7**	**7**	**7**	**7**	**7**	**7**	**7**

RIC = 1.174

We do not recalculate IF for activity G this time because it is the recent activity which is shifted. However, if you calculate it, you will get the same IF for those days having left for possible shifting position of the activity.

ACT	S	r	X	W	m	IF
E	1	4	34	26	1	16
E	2	4	34	22	2	**16**
E	3	4	34	27	3	-20
E	4	4	34	32	4	-56
E	5	4	34	31	5	-68
E	6	4	34	34	5	-80
E	7	4	34	42	5	-112
E	8	4	34	41	5	-108

Shift activity E by two days. Since shifting activity E by two days does not affect resource profile within possible range that activity G can be shifted, we do not have to recalculate IF of activity G again.

Assume that if activity E is shifted by three days, resource profile within range of possible shift of activity G will be affected, so we must recalculate IF of activity G. And not recalculate IF of activity E for now since we have just shifted it.

Sequence step 2. There are two non-critical activities, B and D, which can be shifted.

DAY	1	2	3	4	5	6	7	8	9	10	11	12	13	14	15	16	17	18	19	20	21	22	23	24	25	26	27	28	29	30	31	32	33	34	35	36	37
A	**5**	**5**	**5**	**5**	**5**	**5**																																
B							7	7																														
C							**2**	**2**	**2**	**2**	**2**	**2**	**2**	**2**	**2**	**2**	**2**																					
D							4	4	4																													
E											4	4	4	4	4																						
F																		**5**	**5**	**5**	**5**																
G																9	9																				
H																						**3**	**3**	**3**	**3**	**3**											
I																							6	6	6	6											
J																				5	5	5															
K																											**0**	**0**	**0**	**0**							
L																											**3**	**3**	**3**	**3**							
M																															**7**	**7**	**7**	**7**	**7**	**7**	**7**
RES	**5**	**5**	**5**	**5**	**5**	**5**	**13**	**13**	**6**	**2**	**6**	**6**	**6**	**6**	**6**	**11**	**11**	**5**	**5**	**10**	**10**	**8**	**9**	**9**	**9**	**9**	**3**	**3**	**3**	**3**	**7**	**7**	**7**	**7**	**7**	**7**	**7**

RIC = 1.1552

ACT	S	r	X	W	m	IF
B	1	7	26	19	1	0
B	2	7	26	8	2	28
D	1	4	32	21	1	28
D	**2**	**4**	**32**	**14**	**2**	**40**
D	3	4	32	14	3	24
D	4	4	32	18	3	8
D	5	4	32	18	3	8
D	6	4	32	18	3	8
D	7	4	32	23	3	-12
D	8	4	32	28	3	-32
D	9	4	32	27	3	-28
D	10	4	32	21	3	-4
D	11	4	32	20	3	0
D	12	4	32	25	3	-20
D	13	4	32	28	3	-32

Shift activity D by two days.

Sequence Step 2 the second time. Since shifting activity D affects resource profile within possible range in which activity B can be shifted,
we have to recalculate IF of activity B.

DAY	1	2	3	4	5	6	7	8	9	10	11	12	13	14	15	16	17	18	19	20	21	22	23	24	25	26	27	28	29	30	31	32	33	34	35	36	37
A	5	5	5	5	5	5																															
B							7	7																													
C							2	2	2	2	2	2	2	2	2	2	2																				
D									4	4	4																										
E											4	4	4	4	4																						
F																		5	5	5	5															
G																9	9																				
H																						3	3	3	3	3											
I																							6	6	6	6											
J																				5	5	5															
K																											0	0	0	0							
L																											3	3	3	3							
M																															7	7	7	7	7	7	7
RES	5	5	5	5	5	5	9	9	6	6	10	6	6	6	6	11	11	5	5	10	10	8	9	9	9	9	3	3	3	3	7	7	7	7	7	7	7

RIC = 1.1082

ACT	S	r	X	W	m	IF
B	1	7	18	15	1	-28
B	2	7	18	12	2	-56

There is no better position for B than the current position.

Since we do not shift activity B, resource profile remains the same.

Sequence step 1. There is no activity that can be shifted forward. ⟶

BACKWARD PASS

Sequence step 1. There is no activity that can be shifted backward. ←

Sequence step 2. Activity D. Since activity B cannot be shifted back (positioned any earlier than its current position), we do not have to calculate IF of activity B.

DAY	1	2	3	4	5	6	7	8	9	10	11	12	13	14	15	16	17	18	19	20	21	22	23	24	25	26	27	28	29	30	31	32	33	34	35	36	37
A	**5**	**5**	**5**	**5**	**5**	**5**																															
B							7	7																													
C							**2**	**2**	**2**	**2**	**2**	**2**	**2**	**2**	**2**	**2**	**2**																				
D									4	4	4																										
E											4	4	4	4	4																						
F																		**5**	**5**	**5**	**5**																
G																9	9																				
H																						**3**	**3**	**3**	**3**	**3**											
I																							6	6	6	6											
J																				5	5	5															
K																											**0**	**0**	**0**	**0**							
L																											**3**	**3**	**3**	**3**							
M																															**7**	**7**	**7**	**7**	**7**	**7**	**7**
Res	**5**	**5**	**5**	**5**	**5**	**5**	**9**	**9**	**6**	**6**	**10**	**6**	**6**	**6**	**6**	**11**	**11**	**5**	**5**	**10**	**10**	**8**	**9**	**9**	**9**	**9**	**3**	**3**	**3**	**3**	**7**	**7**	**7**	**7**	**7**	**7**	**7**

RIC= 1.1082

ACT	S	r	X	W	m	IF
D	1	4	22	21	1	-12
D	2	4	22	24	2	-40

No shifting

Sequence step 3.
Activities E and G.

DAY	1	2	3	4	5	6	7	8	9	10	11	12	13	14	15	16	17	18	19	20	21	22	23	24	25	26	27	28	29	30	31	32	33	34	35	36	37
A	**5**	**5**	**5**	**5**	**5**	**5**																															
B							7	7																													
C							**2**	**2**	**2**	**2**	**2**	**2**	**2**	**2**	**2**	**2**	**2**																				
D									4	4	4																										
E											4	4	4	4	4																						
F																		**5**	**5**	**5**	**5**																
G																9	9																				
H																						**3**	**3**	**3**	**3**	**3**											
I																							6	6	6	6											
J																				5	5	5															
K																											**0**	**0**	**0**	**0**							
L																											**3**	**3**	**3**	**3**							
M																															**7**	**7**	**7**	**7**	**7**	**7**	**7**
Res	**5**	**5**	**5**	**5**	**5**	**5**	**9**	**9**	**6**	**6**	**10**	**6**	**6**	**6**	**6**	**11**	**11**	**5**	**5**	**10**	**10**	**8**	**9**	**9**	**9**	**9**	**3**	**3**	**3**	**3**	**7**	**7**	**7**	**7**	**7**	**7**	**7**

RIC= 1.1082

ACT	S	r	X	W	m	IF
E	1	4	34	34	1	-16
E	2	4	34	34	2	-32
G	1	9	22	17	1	-36
G	2	9	22	12	2	-72
G	3	9	22	12	2	-72
G	4	9	22	12	2	-72
G	5	9	22	16	2	-108
G	6	9	22	16	2	-108
G	7	9	22	12	2	-72

No shifting

Sequence step 4. Activities E and G.

DAY	1	2	3	4	5	6	7	8	9	10	11	12	13	14	15	16	17	18	19	20	21	22	23	24	25	26	27	28	29	30	31	32	33	34	35	36	37
A	5	5	5	5	5	5																															
B							7	7																													
C							2	2	2	2	2	2	2	2	2	2	2																				
D									4	4	4																										
E											4	4	4	4	4																						
F																		5	5	5	5																
G																9	9																				
H																						3	3	3	3	3											
I																							6	6	6	6											
J																				5	5	5															
K																											0	0	0	0							
L																											3	3	3	3							
M																															7	7	7	7	7	7	7
Res	5	5	5	5	5	5	9	9	6	6	10	6	6	6	6	11	11	5	5	10	10	8	9	9	9	9	3	3	3	3	7	7	7	7	7	7	7

RIC= 1.1082

ACT	S	r	X	W	m	IF
I	1	6	36	35	1	-30
J	1	5	28	25	1	-10
J	2	5	28	20	2	-10

No shifting

RIC = 1.1082 (originally 1.3126)

Max Resource Requirement in day is 11 (originally 19)

Sequence step 5. There is no activity that could be possibly shifted backward.
Sequence step 6. There is no activity that could be possibly shifted backward.

In this case since there is no shifting during backward pass, there is high chance that this is the best result for Minimum Moment Method algorithm. If there is shifting during backward pass, we should do forward and backward passes again. However, the result would not be much improved.

The following is a part of a network that is resource-leveled by using **Minimum Moment Method**. This example shows how to **save time** in calculating Improvement Factor in the same sequence step where many non-critical activities exist.

Use Minimum Moment Method to leveling this network.

Let activities M, N, K, and J are in the same sequence step, SQS 5

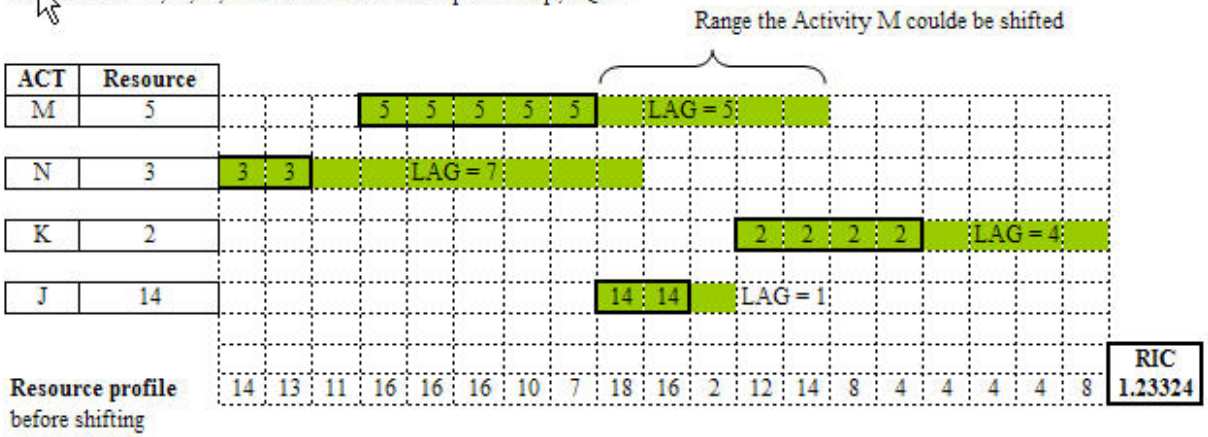

SQS 5 ROUND 1

ACT	S	r	X	W	m	IF
M	1	5	65	67	1	-35
M	2	5	65	67	2	-60
M	3	5	65	53	3	-15
M	4	5	65	55	4	-50
M	5	5	65	62	5	-110

ACT	S	r	X	W	m	IF
N	1	3	27	24	1	0
N	2	3	27	27	2	-18
N	3	3	27	32	2	-33
N	4	3	27	32	2	-33
N	5	3	27	26	2	-15
N	6	3	27	17	2	12
N	7	3	27	25	2	-12

ACT	S	r	X	W	m	IF
K	1	2	38	30	1	12
K	2	2	38	20	2	28
K	3	2	38	16	3	32
K	4	2	38	20	4	20

SO SHIFTING ACTIVITY K BY 3 DAYS

ACT	S	r	X	W	m	IF
J	1	14	34	18	1	28

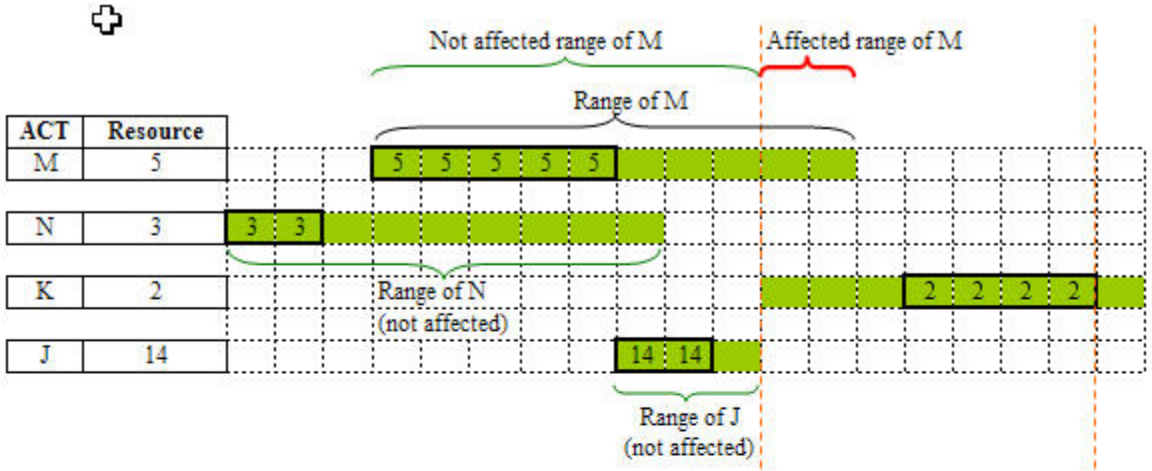

SQS 5 ROUND 2

!!!Since activity K is just shifted IN THE LAST ROUND, so it is not necessary to to recalculate IF of K.

!!!There is NO NEED TO RECALCULATE Improvement Factor of N and J,
because their RANGE are on the NOT AFFECTED side. You can just use their previously calculated IF.

ACT	S	r	X	W	m	IF
M	1	5	65	67	1	-35
M	2	5	65	67	2	-60
M	3	5	65	53	3	-15
M	4	5	65	53	4	-40
M	5	5	65	58	5	-90

ACT	S	r	X	W	m	IF
N	1	3	27	24	1	0
N	2	3	27	27	2	-18
N	3	3	27	32	2	-33
N	4	3	27	32	2	-33
N	5	3	27	26	2	-15
N	6	3	27	17	2	12
N	7	3	27	25	2	-12

As explained above, if you recalculate IF of N,
IF of N will be all the same.

SO SHIFTING ACTIVITY J BY 1 DAYS

ACT	S	r	X	W	m	IF
J	1	14	34	18	1	28

As explained above, if you recalculate IF of J,
IF of J will be all the same.

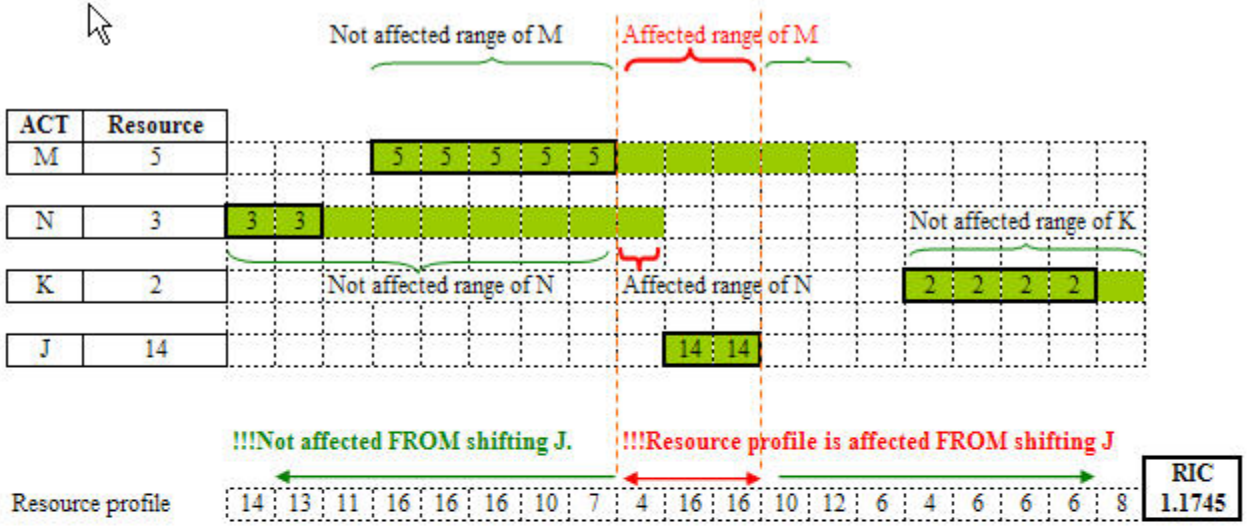

SQS 5 ROUND 3

!!!Since activity J is just shifted IN THE LAST ROUND, so it is not necessary to to recalculate IF of J.
In this round we have to calculate Improvement Factor of M, N, and K.

ACT	S	r	X	W	m	IF
M	1	5	65	53	1	35
M	2	5	65	53	2	10
M	3	5	65	53	3	-15
M	4	5	65	53	4	-40
M	5	5	65	58	5	-90

DOES IT MAKE SENSE TO YOU
WHY Improvement Factor of shifting M by 1 day become positive?
Affected range of M

ACT	S	r	X	W	m	IF
K	1	2	22	26	1	-12

ACT	S	r	X	W	m	IF
N	1	3	27	24	1	0
N	2	3	27	27	2	-18
N	3	3	27	32	2	-33
N	4	3	27	32	2	-33
N	5	3	27	26	2	-15
N	6	3	27	17	2	12
N	7	3	27	11	2	30

Affected range of N

SO SHIFTING ACTIVITY M BY 1 DAY

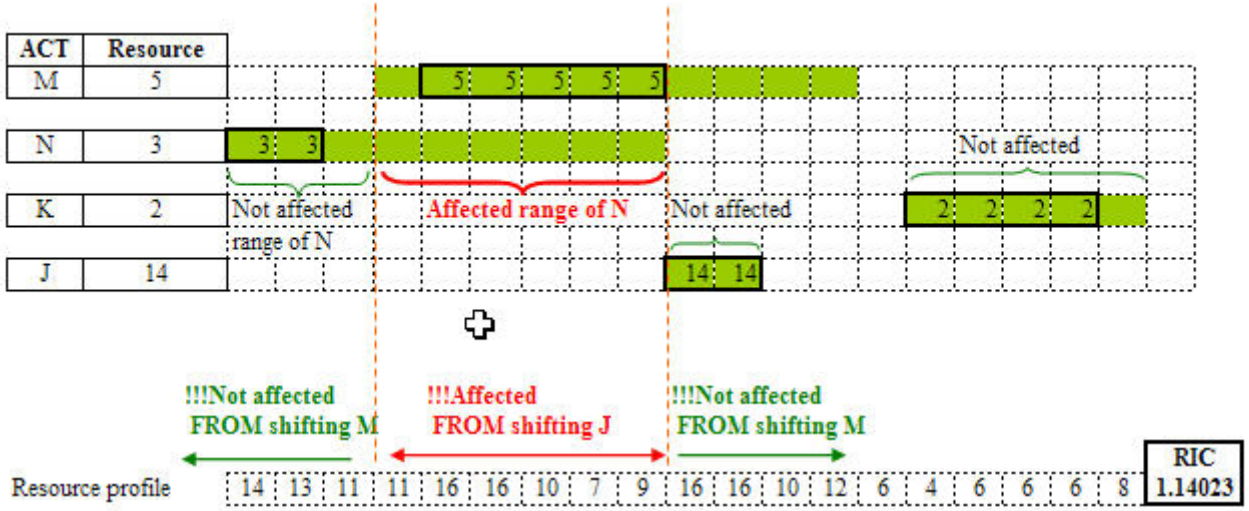

SQS 5 ROUND 4

!!!Since activity M is just shifted IN THE LAST ROUND, so it is not necessary to to recalculate IF of M.
In this round we have to calculate Improvement Factor of N.
Since activity J cannot be shifted anymore, there is no need to consider shifting J.

ACT	S	r	X	W	m	IF
K	1	2	22	26	1	-12

(Copied from previous round)

ACT	S	r	X	W	m	IF
N	1	3	27	24	1	0
N	2	3	27	22	2	-3
N	3	3	27	27	2	-18
N	4	3	27	32	2	-33
N	5	3	27	26	2	-15
N	6	3	27	17	2	12
N	7	3	27	16	2	15

SO SHIFTING ACTIVITY N BY 7 DAYS

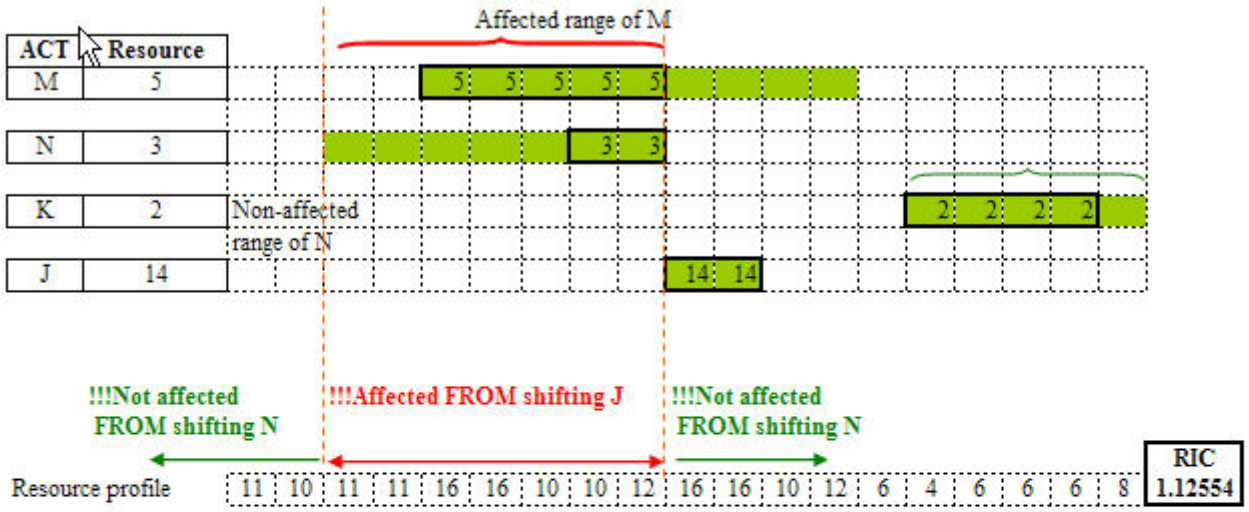

SQS 5 ROUND 5

!!!Since activity N is just shifted IN THE LAST ROUND, so it is not necessary to to recalculate IF of N.
In this round we have to calculate Improvement Factor of M, and K.
Since activity J cannot be shifted anymore, there is no need to consider shifting J.
Because resource profile in the range of activity K is not affected from shifting N, IF of K is still the same.

ACT	S	r	X	W	m	IF
M	1	2	64	64	1	-4
M	2	5	64	64	2	-50
M	3	5	64	64	3	-75
M	4	5	64	66	4	-110

ACT	S	r	X	W	m	IF
K	1	2	22	26	1	-12

Can you guess why IF of shifting K by 1 day is NEGATIVE?

NO SHIFTING ---> FINISH LEVELING in this SQS. YEAH!!!! FINALLY.

10.RESOUCE LEVELING

- PACK

Example of PACK (an unlimited resource leveling method)

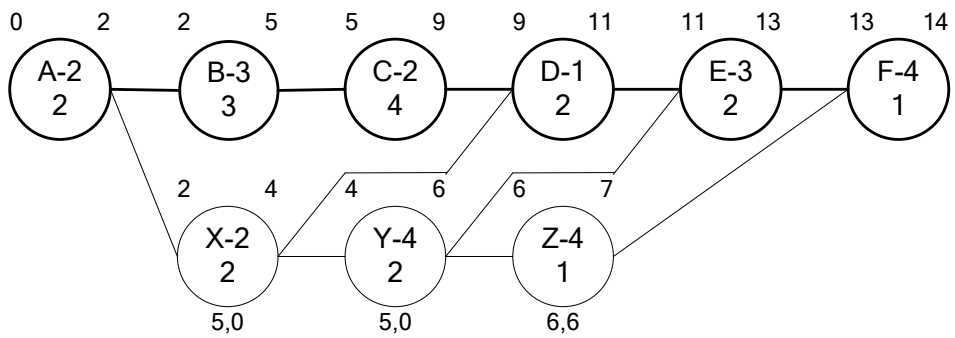

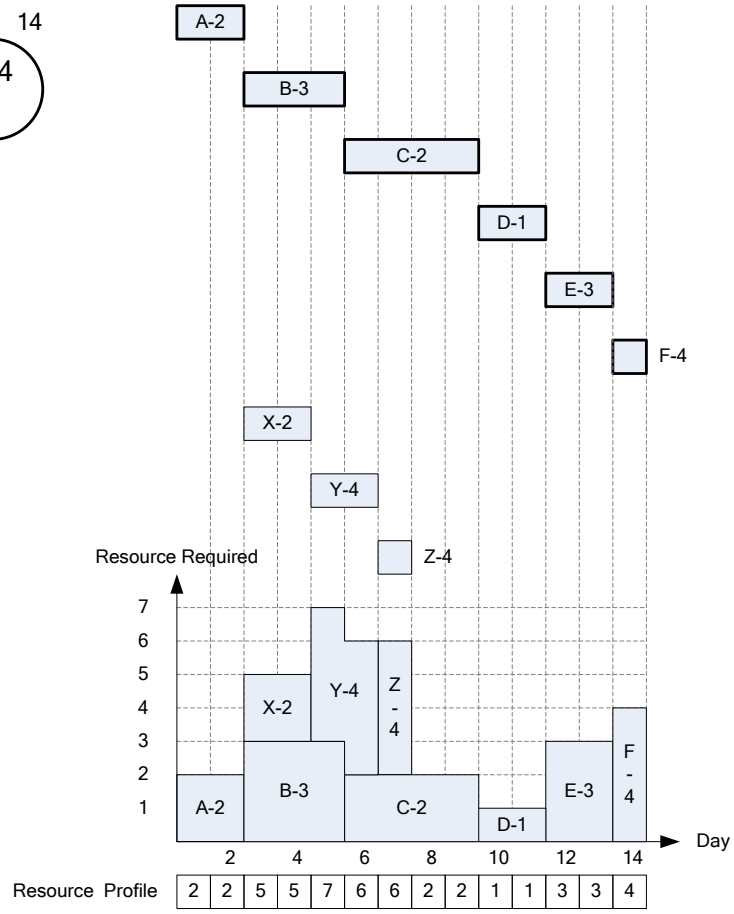

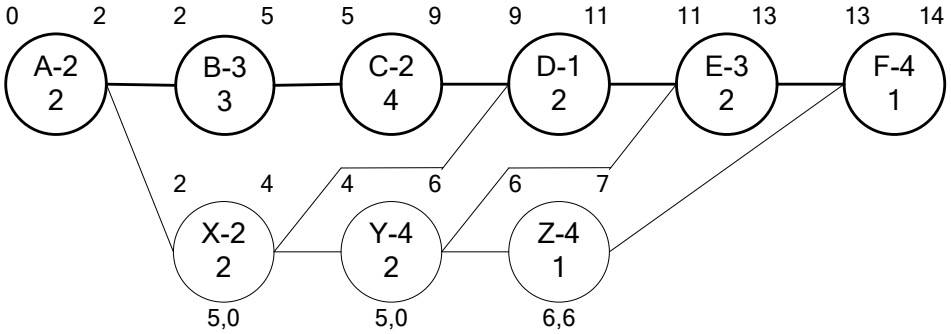

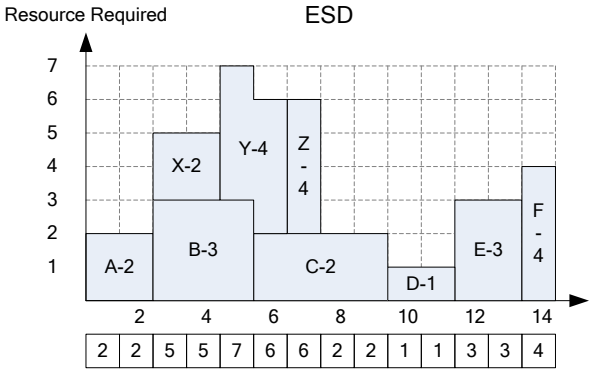

Resource Profile

2	2	5	5	7	6	6	2	2	1	1	3	3	4

PRIORITIZATION RULES FOR PACK METHOD

- Resource required/day from Max to Min
  - Total float from Min to Max
    - Sequence step from Max to Min

NO	PROCESSING QUEUE			
	ACT	RES	TF	SQS
1	Y	4	5	3
2	Z	4	6	4
3	X	2	5	2

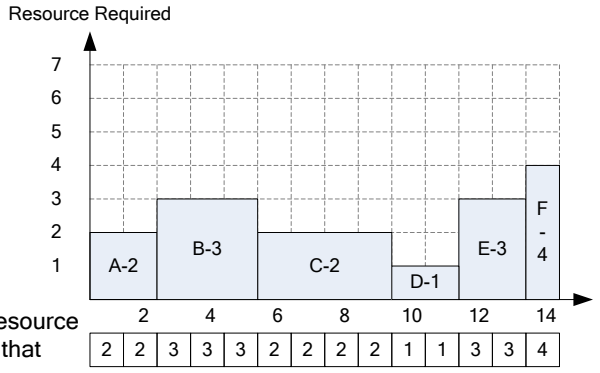

Resource Profile of resource that must occupy that particular day

2	2	3	3	3	2	2	2	2	1	1	3	3	4

In the beginning, resource profile of PACK only includes resources that must occupy that particular day. Thus, most of resources in this resource profile are of critical activities, and some of non-critical activities whose duration is shorter tha TF.

Tentative position of Y without shifting

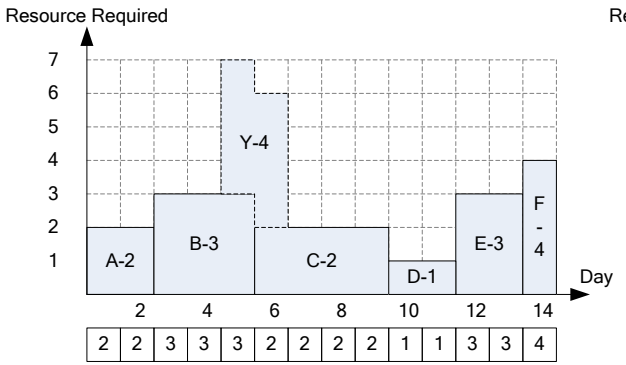

Tentative position of Y with 1 shifting day

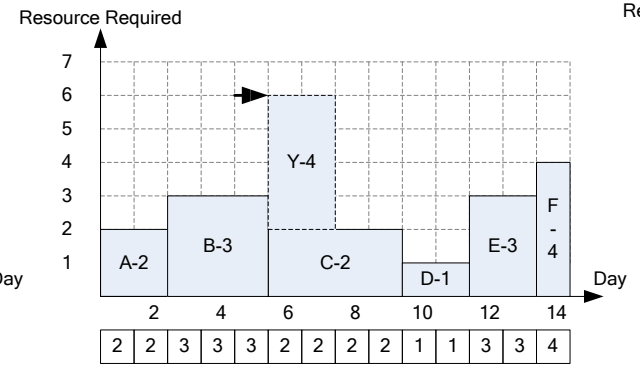

Tentative position of Y with 2 shifting days

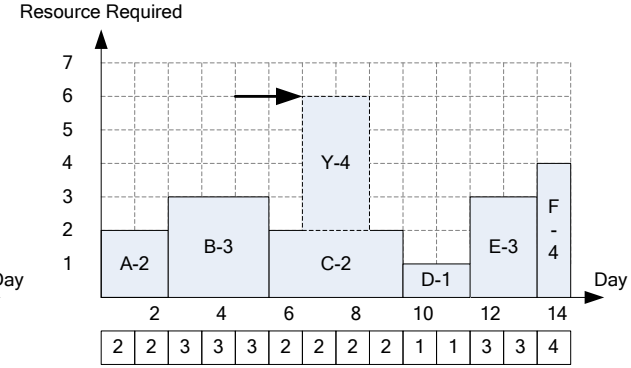

Tentative position of Y with 3 shifting days

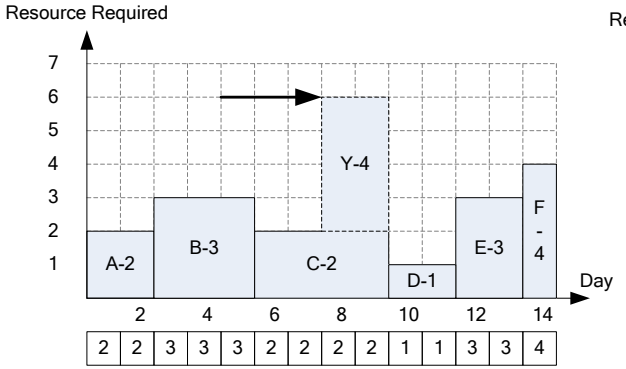

Tentative position of Y with 4 shifting days

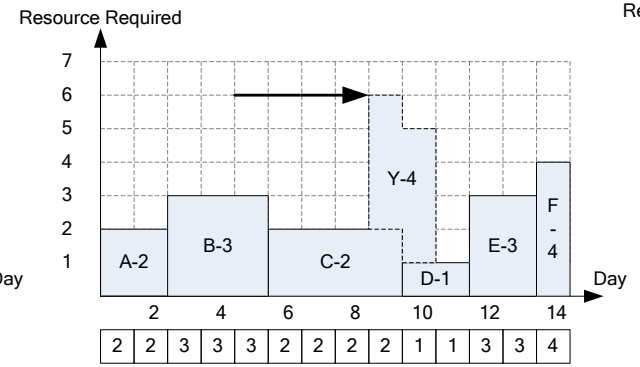

Tentative position of Y with 5 shifting days

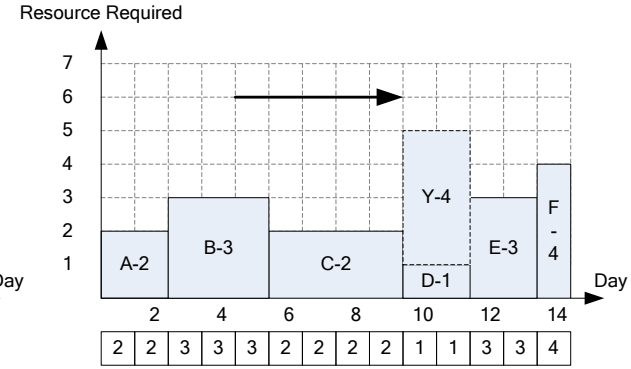

Question: From the above figures, why do we prefer position 10-11 for act Y ??? Answer: it provides the minimum sum of resource (1+1=2). J

Note that: including resource of Y into the profile does not change our answer. WHY?

Can we improve this very simple rule a little bit further while it is still possible for manual calculation?

YES!! Let's consider PRED and SUCC of Y while trying to schedule activity Y. (These PRED and SUCC are non-critical activities)

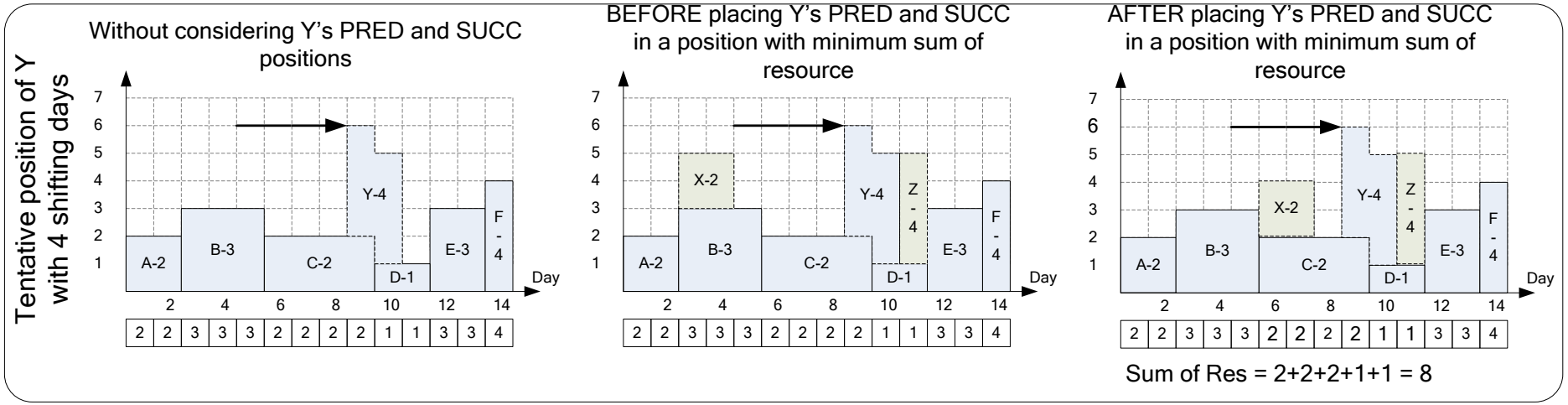

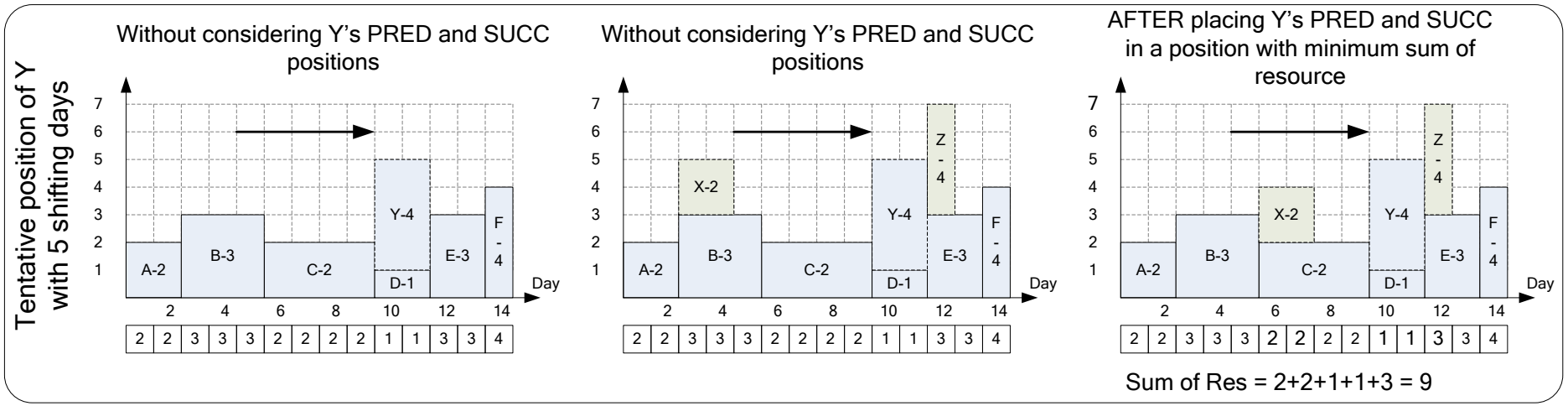

As shown, the best position of Y in position 10-11 is not the best position for the overall project after considering the possibility of scheduling its non-critical PRED and SUCC.

Example of finding a minimum sum of resources for Y in position 5-6.

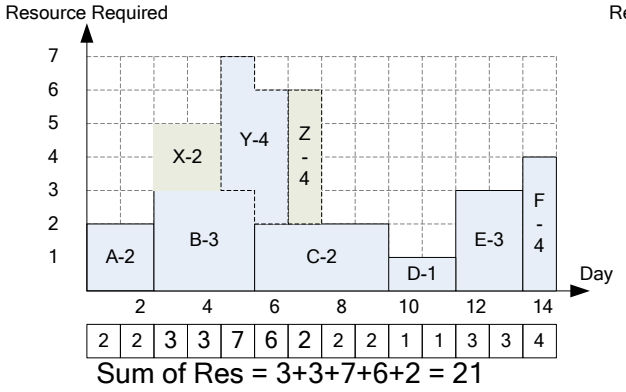

Sum of Res = 3+3+7+6+2 = 21

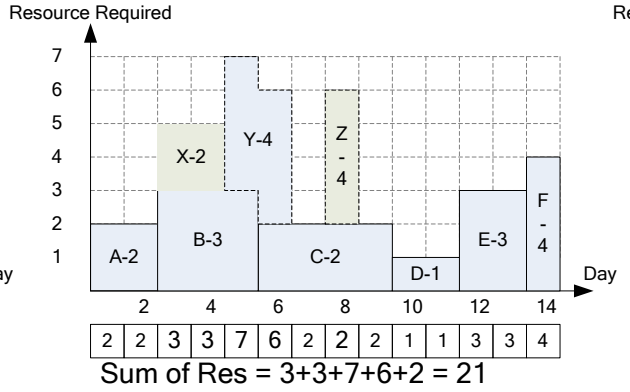

Sum of Res = 3+3+7+6+2 = 21

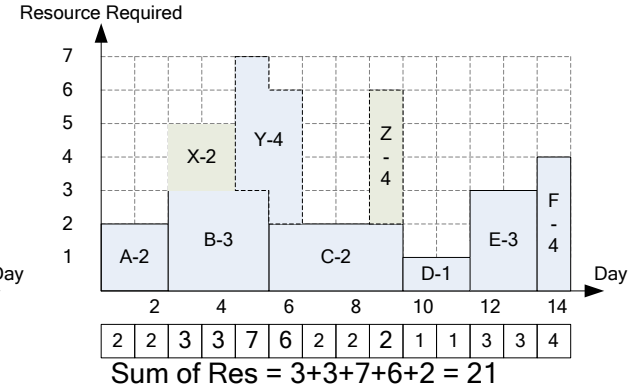

Sum of Res = 3+3+7+6+2 = 21

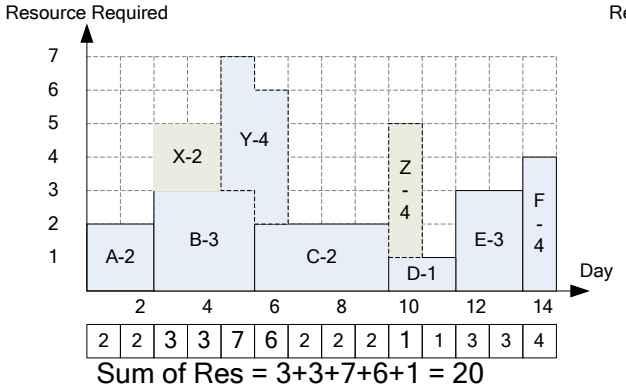

Sum of Res = 3+3+7+6+1 = 20

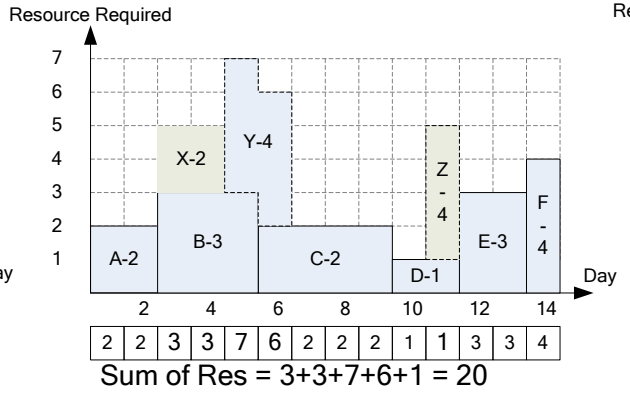

Sum of Res = 3+3+7+6+1 = 20

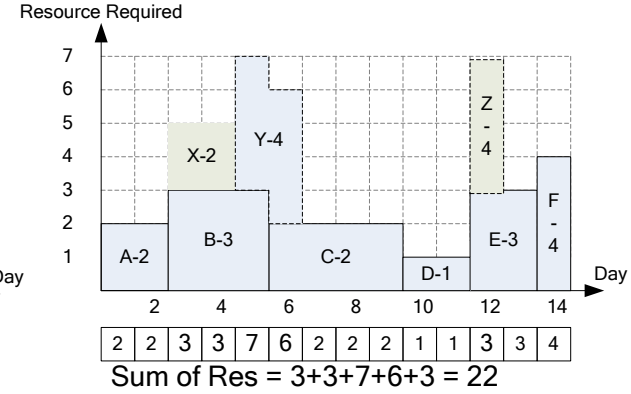

Sum of Res = 3+3+7+6+3 = 22

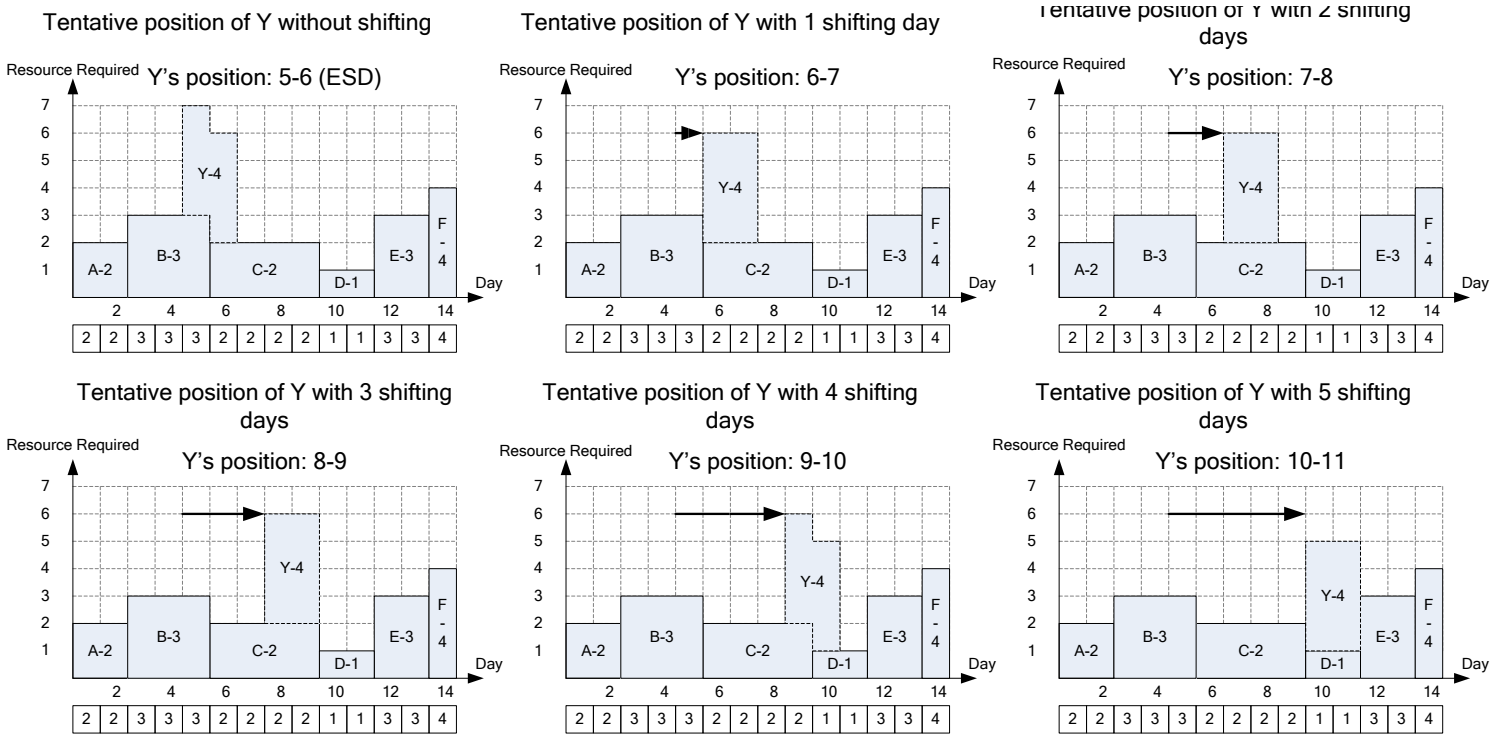

Y's position	∑RS(Y)	X's best position	Min ∑RS(X)	Z's best position	Min ∑RS(Z)	∑
5-6 (ESD)	**3+2=5**	3-4	**3+3=6**	10	**1**	12
6-7	**2+2=4**	3-4	**6**	10	**1**	9
7-8	**2+2=4**	4-5	**3+2=5**	10	**1**	10
8-9	**2+2=4**	5-6	**2+2=4**	10	**1**	9
9-10	**2+1=3**	5-6	**4**	11	**1**	**8←Min**
10-11	**1+1=2**	5-6	**4**	12	**3**	9

Thus, we will place activity Y on day 9-10. Then, do the same calculation for activity Z and X. However, the calculation becomes a lot easier and faster since they, both, have no non-critical PRED and SUCC that haven't been assigned. You can just look at your updated resource profile and assign both activities on those days with minimum resource.

Graphical explanation for the previous page.

Tentative position of Y without shifting, and best position for its PRED and SUCC
Y's position: 5-6

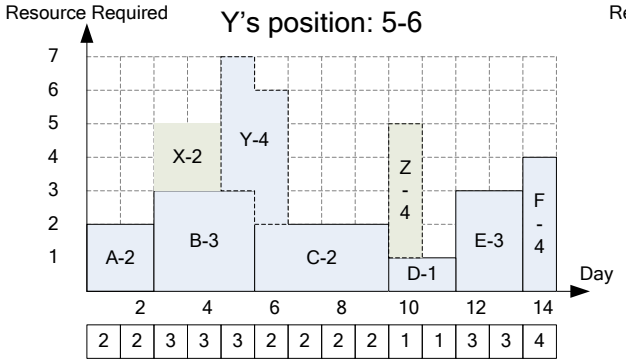

Tentative position of Y with 1 shifting day, and best position for its non-critical PRED and SUCC
Y's position: 6-7

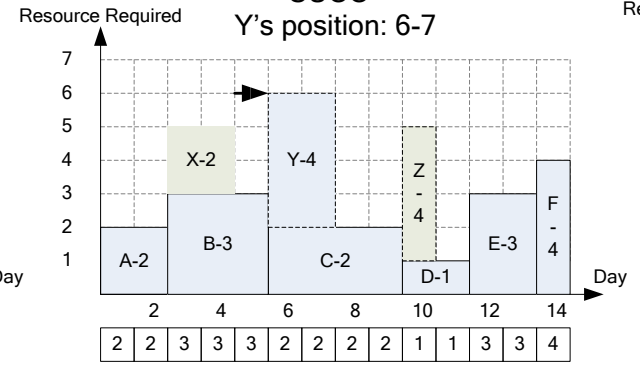

Tentative position of Y with 2 shifting days, and best position for its non-critical PRED and SUCC
Y's position: 7-8

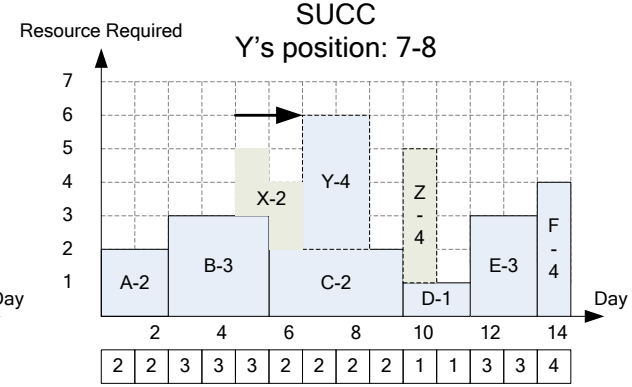

Tentative position of Y with 3 shifting days, and best position for its non-critical PRED and SUCC
Y's position: 8-9

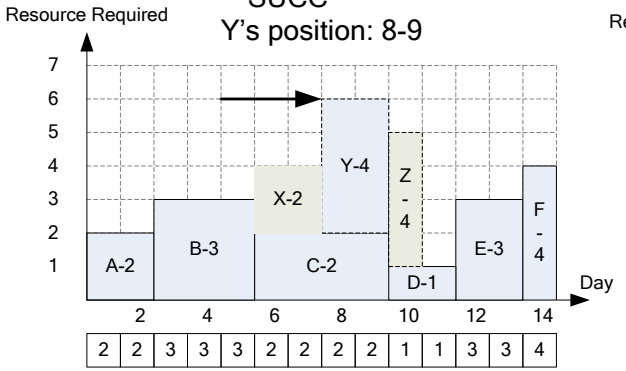

Tentative position of Y with 4 shifting days, and best position for its non-critical PRED and SUCC
Y's position: 9-10

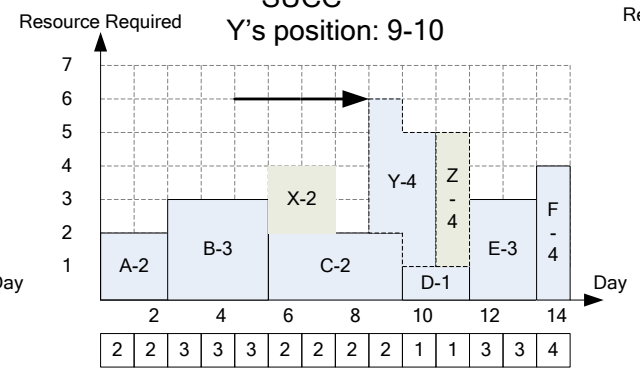

Tentative position of Y with 5 shifting days, and best position for its non-critical PRED and SUCC
Y's position: 10-11

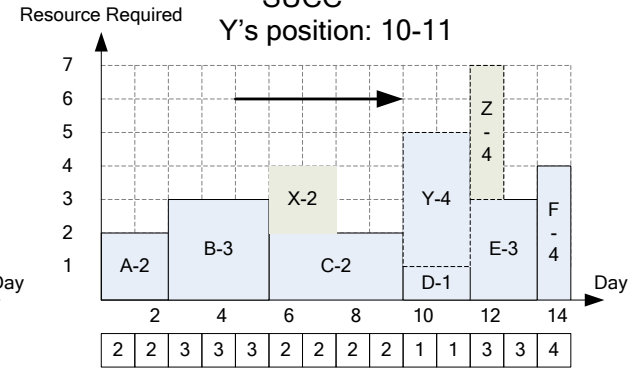

After schedule Y, the next non-critical activity that will be scheduled is Z according to PACK's prioritization rules (called Processing Queue)

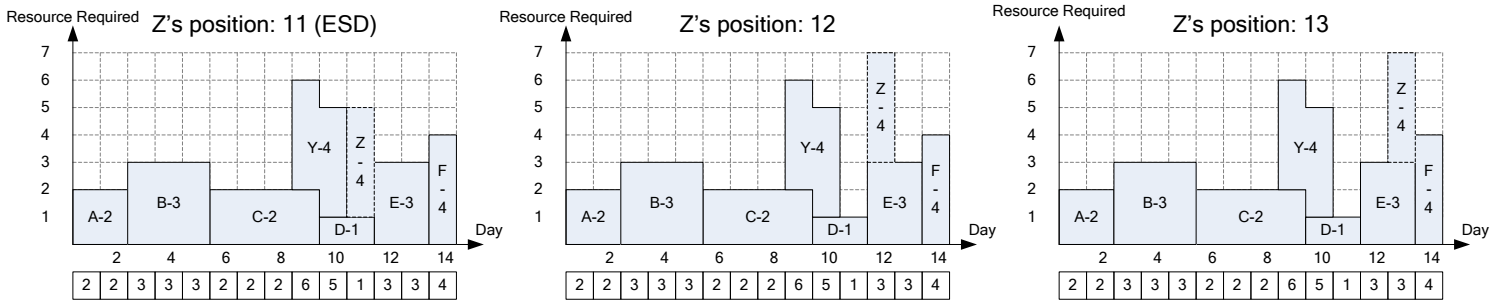

Z's position	∑**RS(Z)**	∑
11	**1**	1←**Min**
12	**3**	3
13	**3**	3

Next, schedule activity X.

Tentative position of X without shifting

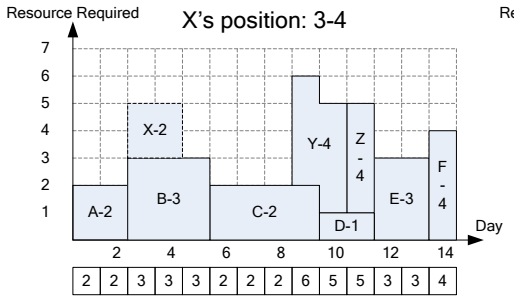

Tentative position of X with 1 shifting day

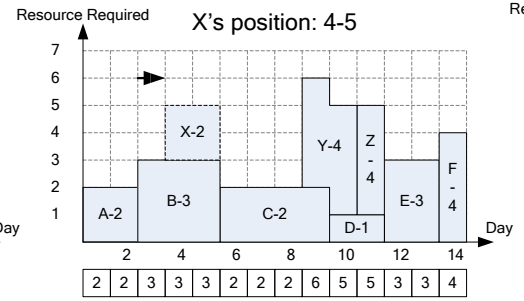

Tentative position of Y with 2 shifting days

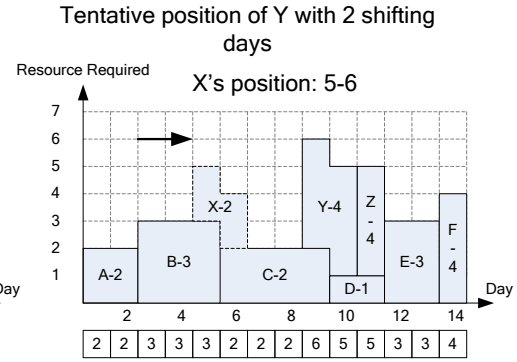

Tentative position of X with 3 shifting days

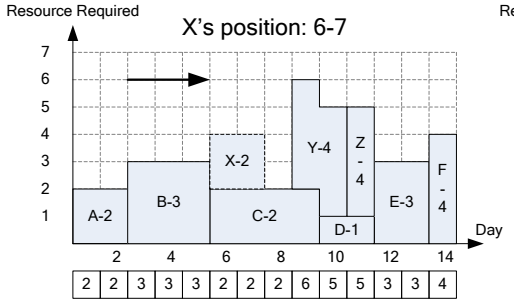

Tentative position of X with 4 shifting days

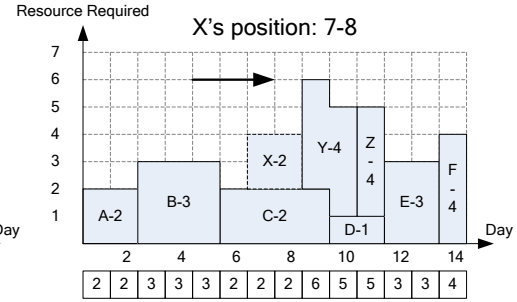

X's position	∑RS(X)	∑
3-4	**3+3=6**	6
4-5	**3+3=6**	6
5-6	**3+2=5**	5
6-7	**2+2=4**	4←**Min←Choose this one!!**
7-8	**2+2=4**	4←**Min**

If there is a tie in sum of resource, we choose the earlier position because it gives the activity more float.

SUMMARY

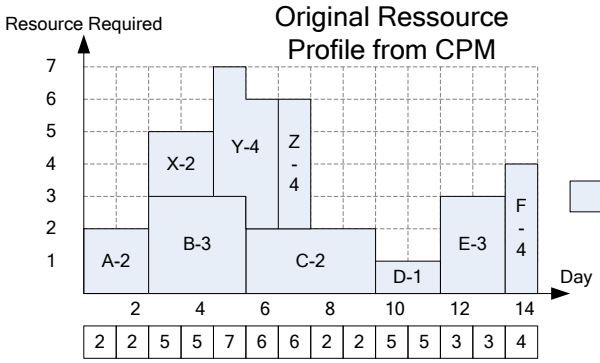

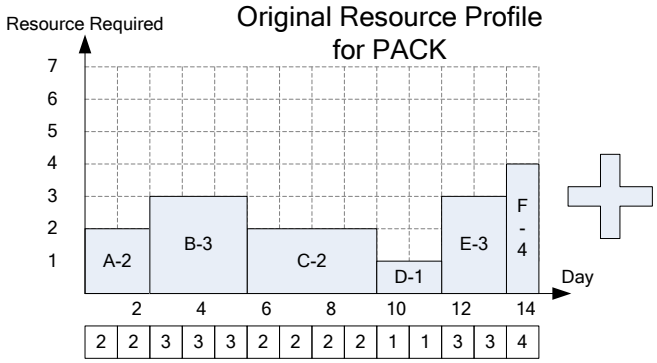

NO	PROCESSING QUEUE			
	ACT	RES	TF	SQS
1	Y	4	5	3
2	Z	4	6	4
3	X	2	5	2

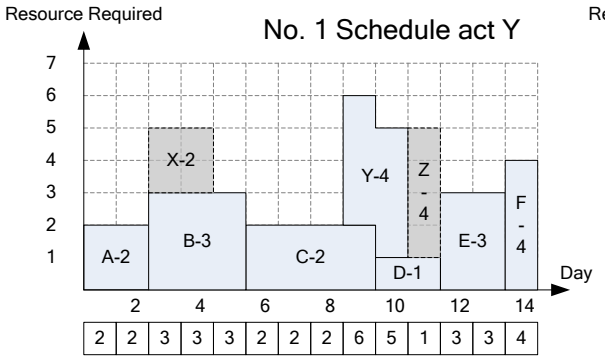

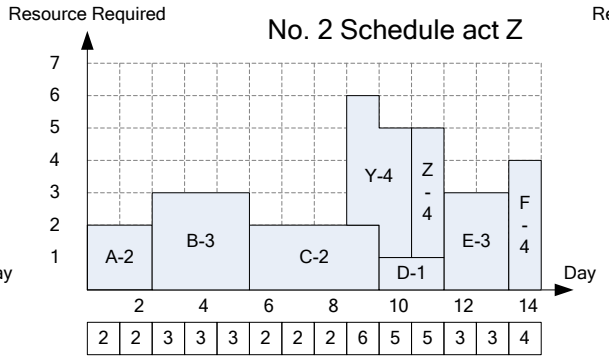

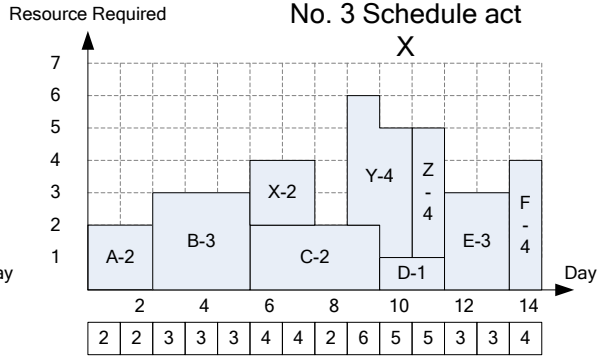

PACK'S CALCULATION TABLE

SQS	RES	AC	JC	DUR	ACT	1	2	3	4	5	6	7	8	9	10	11	12	13	14
1					A														
2					B														
3					C														
4					D														
5					E														
6					F														
2					X														
3					Y														
4					Z														
No			assign		**RS**														
1																			
2																			
3																			
RIC =																			

Problem 10.1 Leveling the following network using PACK

Activity	Predecessors	Duration	Resource Rate
A		6	5
B	A	2	7
C	A	11	2
D	A	3	4
E	B	5	4
F	B,C	4	5
G	B	2	9
H	E,F	5	3
I	D, F,G	4	6
J	C,G	3	5
K	H	4	0
L	H, I, J	4	3
M	K,L	7	7

Solution for 10.1 PACK problem. (Note: Because of the limited page space, day 1 to 7 and day 31 to 37 are not shown here.)

SQS	RES	AC	JC	DUR	ACT	7	8	9	10	11	12	13	14	15	16	17	18	19	20	21	22	23	24	25	26	27	28	29	30
1	5	0	0	6	A																								
2	2	0	0	11	C	**1**	**1**	**1**	**1**	**1**	**1**	**1**	**1**	**1**	**1**	**1**													
3	5	0	0	4	F												**1**	**1**	**1**	**1**									
4	3	0	0	5	H																**1**	**1**	**1**	**1**	**1**				
5	0	0	0	4	K																					**1**	**1**	**1**	**1**
5	3	0	0	4	L																					**1**	**1**	**1**	**1**
6	7	0	0	7	M																								
2	7	8		2	B	2	2	2	2	2	2	2	2	2	2														
2	4	13		3	D	2	2	2	2	2	2	2	2	2	2	2	2	2	2	2	2								
3	4	8		5	E			2	2	2	2	2	2	2	2	2	2	2	2	2									
3	9	11		2	G			2	2	2	2	2	2	2	2	2	2	2	2	2	2								
4	6	1		4	I																2	**1**	**1**	**1**	2				
4	5	6		3	J												2	2	2	2	2	2	2	2	2				
No			assign		**RS**	2	2	2	2	2	2	2	2	2	2	2	5	5	5	5	3	9	9	9	3	3	3	3	3
1																													
2																													
3																													
4																													
5																													
6																													
RIC =																													

PROCESSING QUEUE

No	ACT	RES	TF	SQS
1	G	9	12	3
2	B	7	8	2
3	I	6	1	4
4	J	5	6	4
5	E	4	8	3
6	D	4	13	2

ACT G
AC = 11
DUR = 2

Assign to day 9-10

G Assign.	∑RS(G)	B Assign.	min∑RS(B)	I Assign.	min∑RS(I)	J Assign.	min∑RS(J)	∑
9-10	**4**	**7-8**	**4**	**22-25**	**3**	**20-22**	**13**	**24**
10-11	4	7-8	4	22-25	3	20-22	13	24
11-12	4	7-8	4	22-25	3	20-22	13	24
12-13	4	7-8	4	22-25	3	20-22	13	24
13-14	4	7-8	4	22-25	3	20-22	13	24
14-15	4	7-8	4	22-25	3	20-22	13	24
15-16	4	7-8	4	22-25	3	20-22	13	24
16-17	4	7-8	4	22-25	3	20-22	13	24
17-18	7	7-8	4	22-25	3	20-22	13	27
18-19	10	7-8	4	22-25	3	20-22	13	30
19-20	10	7-8	4	22-25	3	21-23	17	34
20-21	10	7-8	4	22-25	3	24-26	21	38
21-22	10	7-8	4	23-26	3	24-26	21	38

SQS	RES	AC	JC	DUR	ACT	7	8	9	10	11	12	13	14	15	16	17	18	19	20	21	22	23	24	25	26	27	28	29	30
1	5	0	0	6	A																								
2	2	0	0	11	C	**1**	**1**	**1**	**1**	**1**	**1**	**1**	**1**	**1**	**1**	**1**													
3	5	0	0	4	F												**1**	**1**	**1**	**1**									
4	3	0	0	5	H																**1**	**1**	**1**	**1**	**1**				
5	0	0	0	4	K																					**1**	**1**	**1**	**1**
5	3	0	0	4	L																					**1**	**1**	**1**	**1**
6	7	0	0	7	M																								
2	7	0 ~~8~~		2	B	2	2	0 ~~2~~	0 ~~2~~	0 ~~2~~	0 ~~2~~	0 ~~2~~	0 ~~2~~	0 ~~2~~	0 ~~2~~															
2	4	13		3	D	2	2	2	2	2	2	2	2	2	2	2	2	2	2	2	2								
3	4	8		5	E			2	2	2	2	2	2	2	2	2	2	2	2	2									
3	9	11	1	2	G			**1** ~~2~~	**1** ~~2~~	0 ~~2~~	0 ~~2~~	0 ~~2~~	0 ~~2~~	0 ~~2~~	0 ~~2~~	0 ~~2~~	0 ~~2~~	0 ~~2~~	0 ~~2~~	0 ~~2~~	0 ~~2~~								
4	6	1		4	I																2	1	1	1	2				
4	5	6		3	J												2	2	2	2	2	2	2	2	2				
No			assign		**RS**	2	2	2	2	2	2	2	2	2	2	2	5	5	5	5	3	9	9	9	3	3	3	3	3
1			9-10		**G**			11	11																				
2					**B**																								
3					**I**																								
4					**J**																								
5					**E**																								
6					**D**																								
RIC =																													

ACT	B							
AC =	0	B						∑
DUR =	2	Assign.	∑RS(B)					
Assign to day	7-8	7-8	4					**4**

ACT	I	I		D				
AC =	1	Assign.	∑RS(I)	Assign.	min∑RS(D)			∑
DUR =	4	22-25	3	11-13	6			**9**
Assign to day	22-25	23-26	3	11-13	6			9

ACT	J	J						
AC =	6	Assign.	∑RS(J)					∑
DUR =	3	18-20	15					**15**
Assign to day	18-20	19-21	15					15
		20-22	19					19
		21-23	23					23
		22-24	27					27
		23-25	27					27
		24-26	21					21

ACT	E	E						
AC =	6	Assign.	∑RS(E)					∑
DUR =	3	9-13	28					28
Assign to day	11-15	10-14	19					19
		11-15	**10**					**10**
		12-16	10					10
		13-17	10					10
		14-18	18					18
		15-19	26					26
		16-20	34					34
		17-21	37					37
ACT	D	D						
AC =	12	Assign.	∑RS(D)					∑
DUR =	3	7-9	29					29
Assign to day	15-17	8-10	31					31
		9-11	28					28
		10-12	23					23
		11-13	18					18
		12-14	18					18
		13-15	18					18
		14-16	14					14
		15-17	**10**					**10**
		16-18	14					14
		17-19	22					22
		18-20	30					30
		19-21	25					25

SQS	RES	AC	JC	DUR	ACT	7	8	9	10	11	12	13	14	15	16	17	18	19	20	21	22	23	24	25	26	27	28	29	30
1	5	0	0	6	A																								
2	2	0	0	11	C	**1**	**1**	**1**	**1**	**1**	**1**	**1**	**1**	**1**	**1**	**1**													
3	5	0	0	4	F												**1**	**1**	**1**	**1**									
4	3	0	0	5	H																**1**	**1**	**1**	**1**	**1**				
5	0	0	0	4	K																					**1**	**1**	**1**	**1**
5	3	0	0	4	L																					**1**	**1**	**1**	**1**
6	7	0	0	7	M																								
2	7	0 ~~8~~		2	B	**1** ~~2~~	**1** ~~2~~	0 ~~2~~	0 ~~2~~	0 ~~2~~	0 ~~2~~	0 ~~2~~	0 ~~2~~	0 ~~2~~	0 ~~2~~															
2	4	12 13		3	D	0 ~~2~~	0 ~~2~~	0 ~~2~~	0 ~~2~~	0 ~~2~~	0 ~~2~~	0 ~~2~~	0 ~~2~~	**1** ~~2~~	**1** ~~2~~	**1** ~~2~~	0 ~~2~~	0 ~~2~~	0 ~~2~~	0 ~~2~~	0 ~~2~~								
3	4	 8		5	E			0 ~~2~~	0 ~~2~~	**1** ~~2~~	**1** ~~2~~	**1** ~~2~~	**1** ~~2~~	**1** ~~2~~	0 ~~2~~	0 ~~2~~	0 ~~2~~	0 ~~2~~	0 ~~2~~	0 ~~2~~								
3	9	 11		2	G			**1** ~~2~~	**1** ~~2~~	0 ~~2~~	0 ~~2~~	0 ~~2~~	0 ~~2~~	0 ~~2~~	0 ~~2~~	0 ~~2~~	0 ~~2~~	0 ~~2~~	0 ~~2~~	0 ~~2~~	0 ~~2~~								
4	6	 1		4	I																1 ~~2~~				0 ~~2~~				
4	5	 6		3	J												1 ~~2~~	1 ~~2~~	1 ~~2~~	0 ~~2~~	0 ~~2~~	0 ~~2~~	0 ~~2~~	0 ~~2~~	0 ~~2~~				
No			assign		**RS**	2	2	2	2	2	2	2	2	2	2	2	5	5	5	5	3	9	9	9	3	3	3	3	3
1			9-10		**G**			11	11																				
2			7-8		**B**	9	9																						
3			22-25		**I**																9								
4			18-20		**J**												10	10	10										
5			11-15		**E**					6	6	6	6	6															
6			15-17		**D**									10	6	6													
RIC = 1.120						9	9	11	11	6	6	6	6	10	6	6	10	10	10	5	9	9	9	9	3	3	3	3	3

Solution 10.2 Problem 10.2 Leveling the following network using PACK

Activity	Predecessors	Duration	Resource Rate
A		2	7
B	A	3	2
C	A	5	2
D	B	2	3
E	B	4	1
F	C	3	2
G	C	10	2
H	E	4	5
I	E,F	2	3
J	D,H,I,G	3	6

SQS	RES	AC	JC	DUR	ACT	1	2	3	4	5	6	7	8	9	10	11	12	13	14	15	16	17	18	19	20
1	7	0	0	6	A	**1**	**1**																		
2	2	0	0	11	C			**1**	**1**	**1**	**1**	**1**													
3	2	0	0	4	G								**1**	**1**	**1**	**1**	**1**	**1**	**1**	**1**	**1**	**1**			
4	6	0	0	5	J																		**1**	**1**	**1**
2	2	1	5	3	B			1	1	1	0	0	0	0											
								~~2~~	~~2~~	~~2~~	~~2~~	~~2~~	~~2~~	~~2~~											
3	3	1	10	2	D						0	0	0	0	0	0	0	0	1	1	**0**	**0**			
											~~2~~	~~2~~	~~2~~	~~2~~	~~2~~	~~2~~	~~2~~	~~2~~	~~2~~	~~2~~	~~2~~	~~2~~			
3	1	1	4	4	E						1	1	1	1	0	**0**	**0**	**0**							
											~~2~~	~~2~~	~~2~~	~~2~~	~~2~~	~~2~~	~~2~~	~~2~~							
3	2	1	5	3	F								1	**1**	**1**	0	0	0	0	0					
													~~2~~	~~2~~	~~2~~	~~2~~	~~2~~	~~2~~	~~2~~	~~2~~					
4	5	1	4	4	H										1	1	1	1	0	0	0	0			
															~~2~~	~~2~~	~~2~~	~~2~~	~~2~~	~~2~~	~~2~~	~~2~~			
4	3	1	5	2	I											0	0	0	0	0	1	1			
																~~2~~	~~2~~	~~2~~	~~2~~	~~2~~	~~2~~	~~2~~			
No					**RS**	5	5	2	2	2	2	2	2	2	2	2	2	2	2	2	2	2	6	6	6
1					H										7	7	7	7							
					E						3	3	3	3											
2					I																5	5			
3					D														5	5					
4					B			4	4	4															
5					F								5	5	9										
						7	7	4	4	4	3	3	5	5	9	7	7	7	5	5	5	5	6	6	6

RIC = 1.0744

PROCESSING QUEUE

No	ACT	RES	TF	SQS
1	H	5	4	4
2	I	3	5	4
3	D	3	10	3
4	B	2	4	3
5	F	2	5	3
6	E	1	4	3

ACT H
AC = 4
DUR = 4
Assign to day 10-13

H Assign.	∑RS(J)	E Assign.	min∑RS(J)	∑
10-13	**8**	**6-9**	**8**	**16**
11-14	8	6-9	8	16
12-15	8	6-9	8	16
13-16	8	6-9	8	16
14-17	8	6-9	8	16

Since E is a predecessor of H and it must occupied day 6-9 no matter what, you can assign activity E into the resource profile right the way.

ACT E
AC = 0
DUR = 4
Assign to day 6-9

E Assign.	∑RS(J)	∑
6-9	8	**8**

ACT	I
AC =	5
DUR =	2
Assign to day	16-17

I Assign.	∑RS(J)	F Assign.	min∑RS(J)	∑
11-12	14	8-10	13	27
12-13	14	8-10	13	27
13-14	9	8-10	13	22
14-15	4	8-10	13	17
15-16	4	8-10	13	17
16-17	**4**	**13-15**	**11**	**15**

ACT	D
AC =	10
DUR =	2
Assign to days	14-15

D Assign.	∑RS(J)	∑
6-7	6	6
7-8	6	6
8-9	6	6
9-10	10	10
10-11	14	14
11-12	14	14
12-13	14	14
13-14	9	9
14-15	**4**	**4**
15-16	7	7
16-17	10	10

ACT	B
AC =	0
DUR =	3
Assign to days	3-5

B Assign.	∑RS(J)	∑
3-5	6	**6**

ACT	F	F		∑
AC =	5	Assign.	∑RS(J)	
DUR =	3	**8-10**	**13**	**13**
Assign to days	8-10	9-11	17	17
		10-12	21	21
		11-13	21	21
		12-14	19	19
		13-15	17	17

Problem 10.3

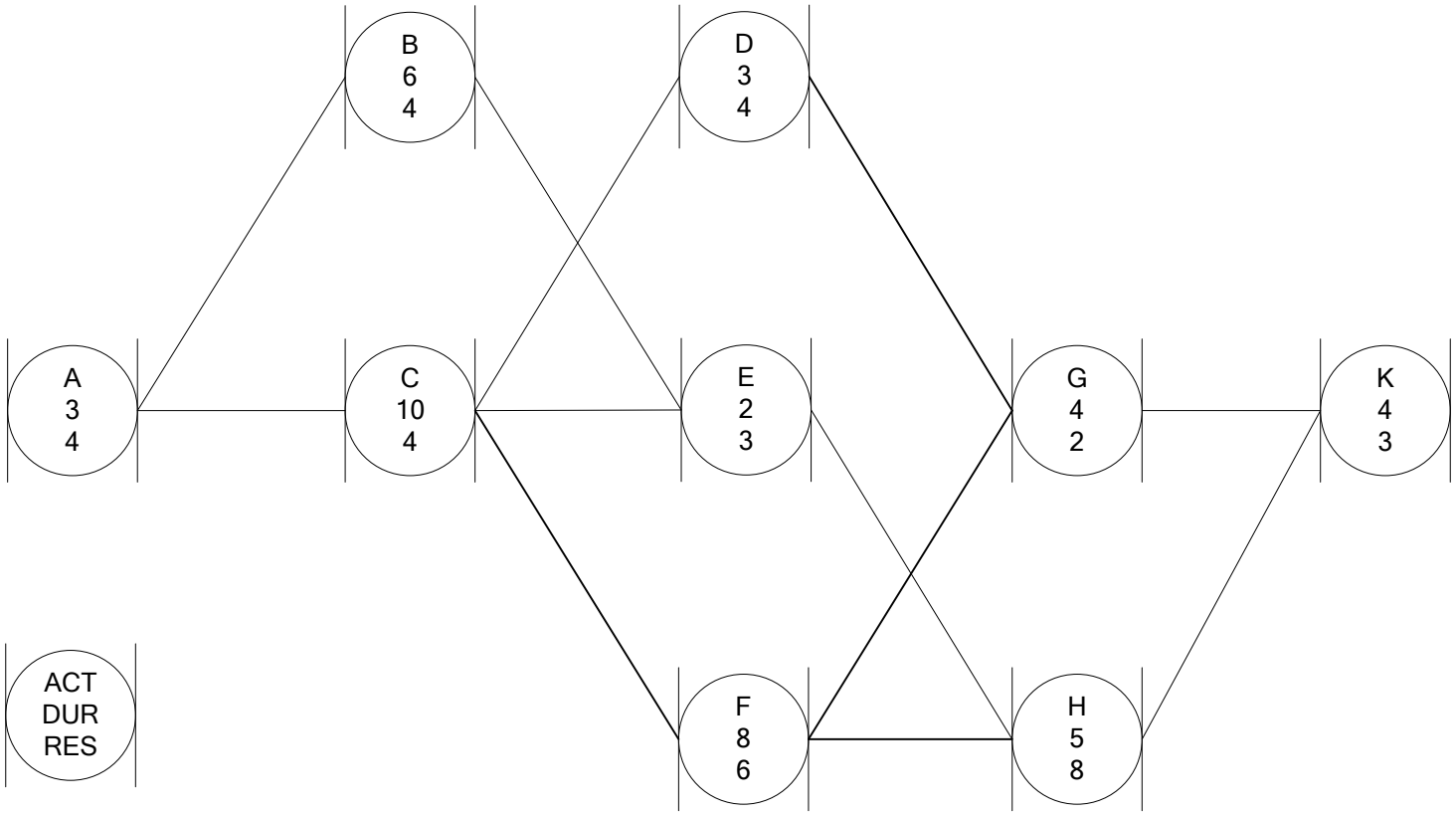

Problem 10.4

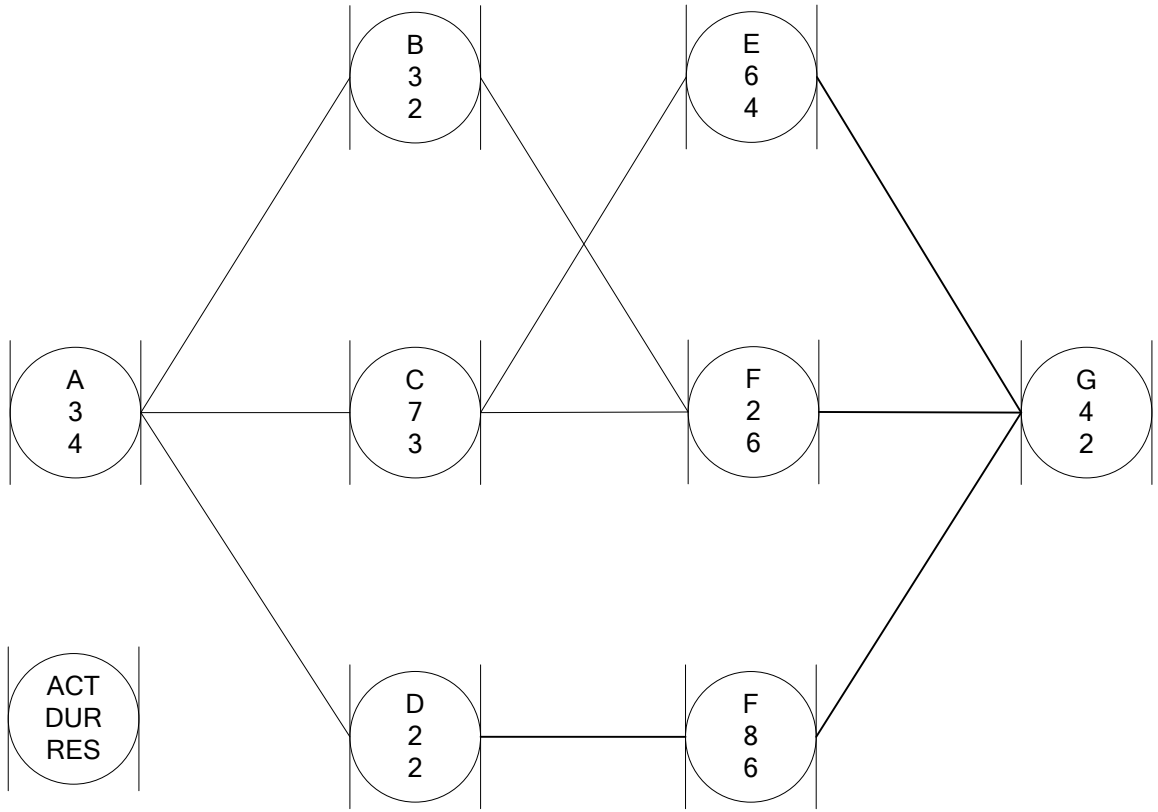

11.OVERLAPPING NETWORKS

11. OVERLAPPING NETWORK

Problem 11.1 Calculate ESD, EFD, TF, and FF

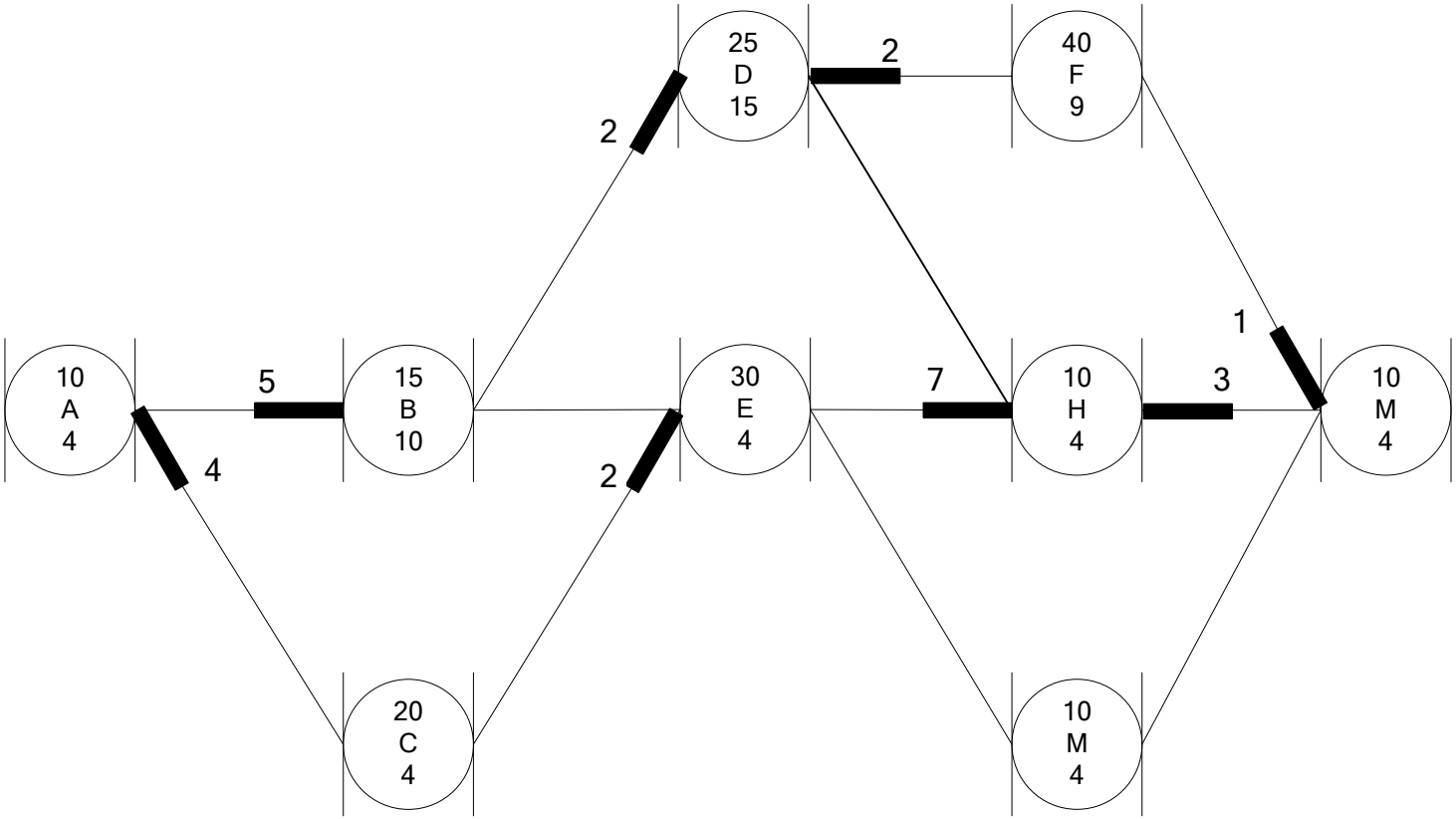

Solution 11.1

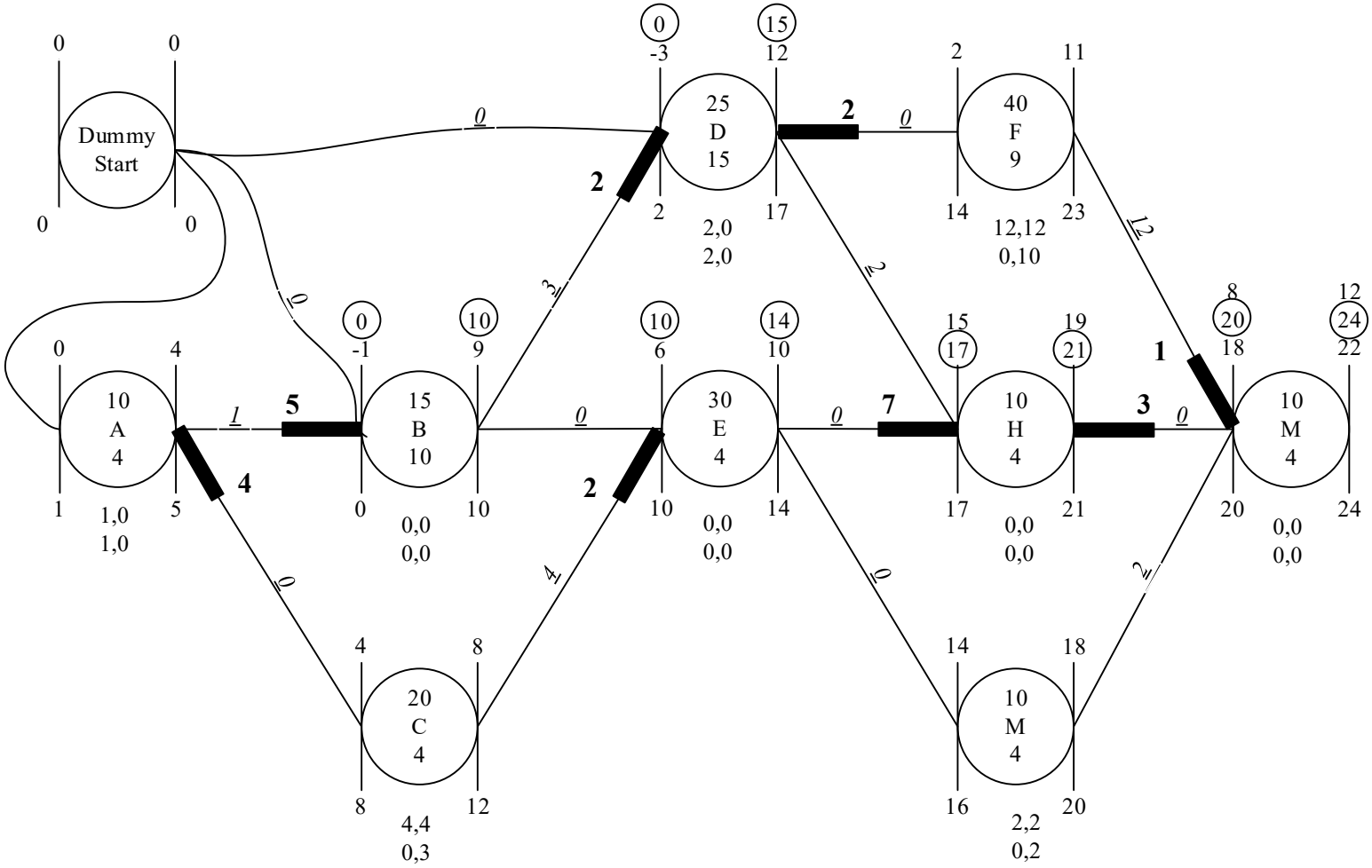

Problem 11.2

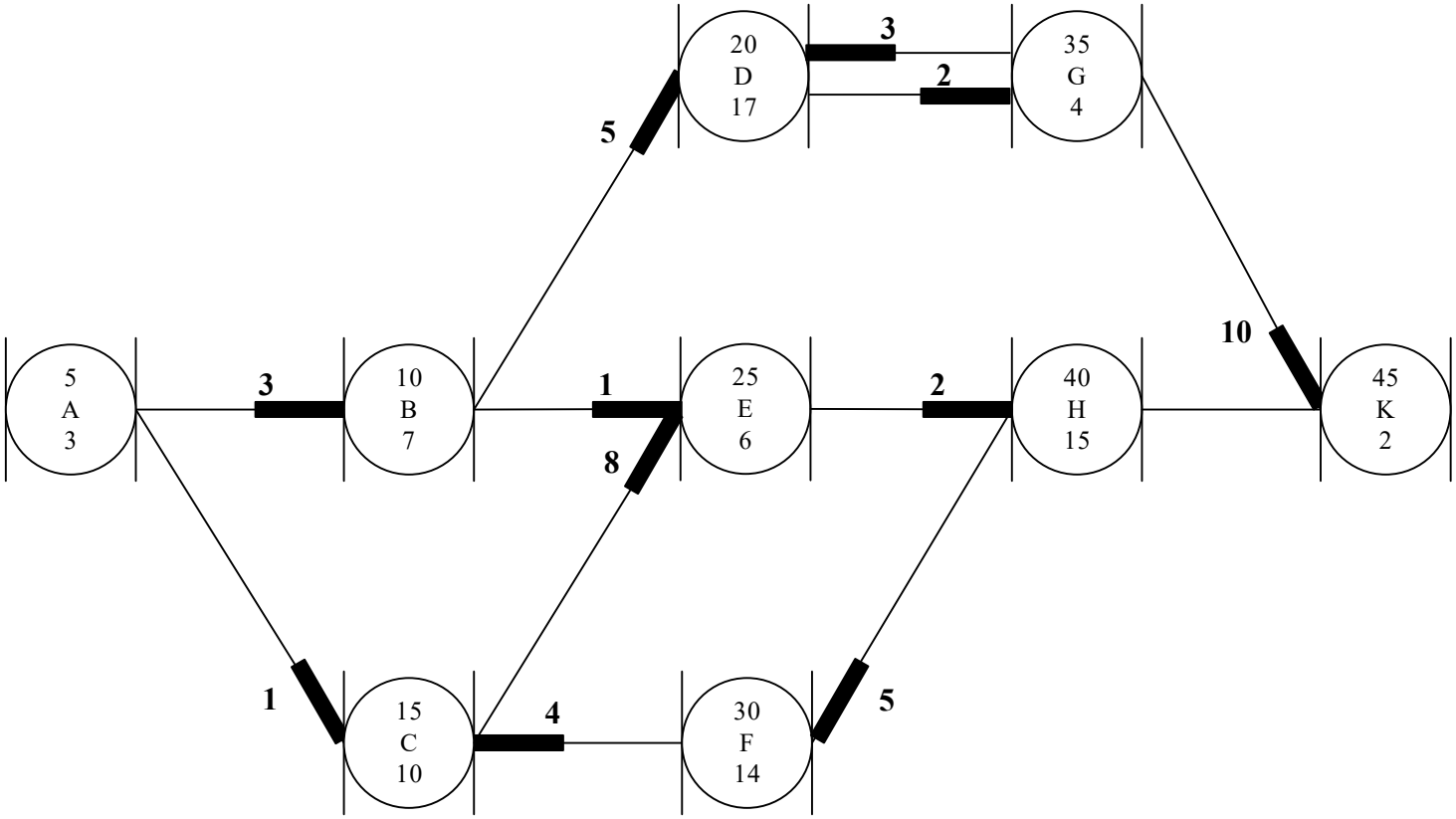

Solution 11.2

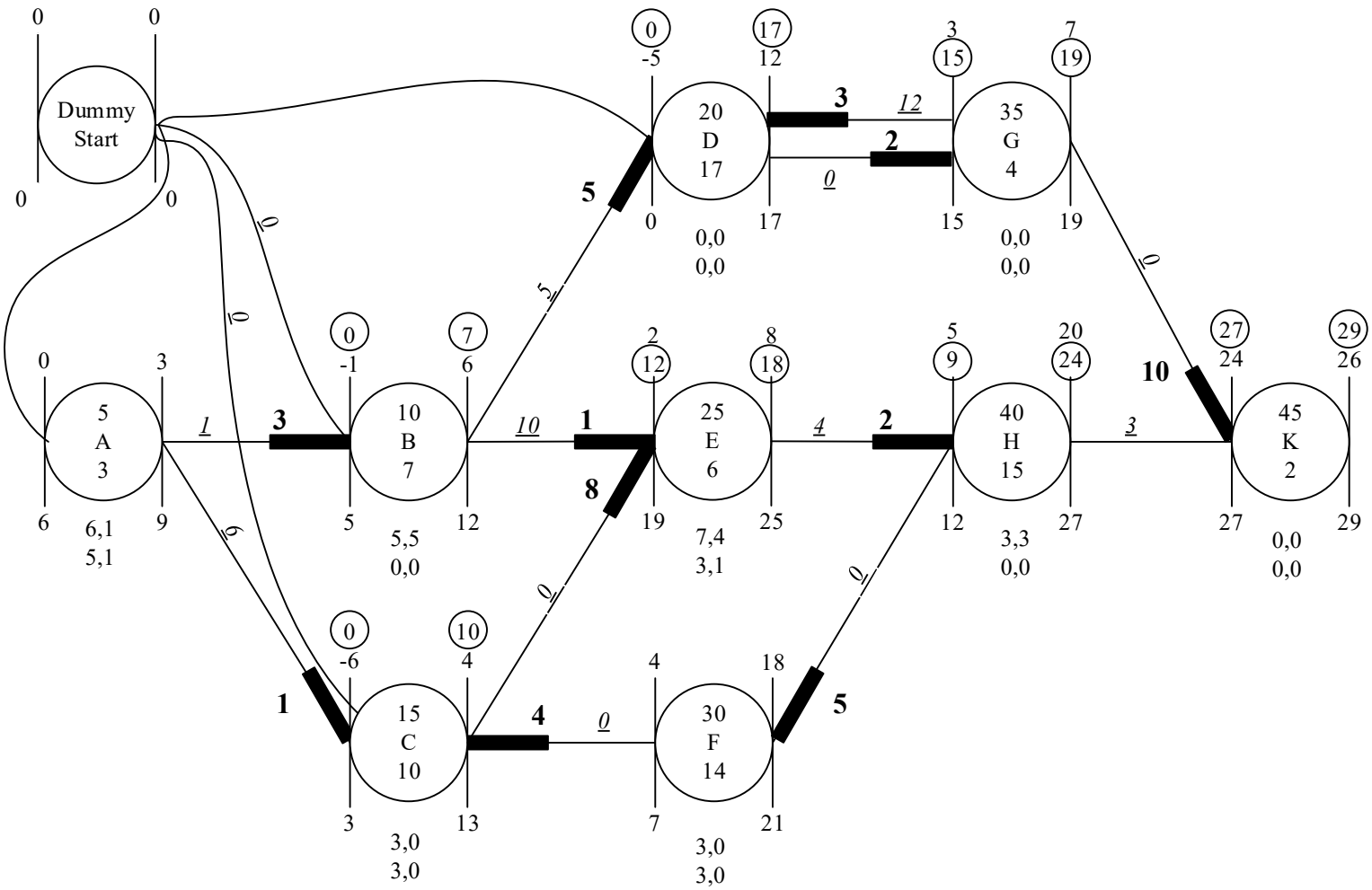
Dummy
Start
5
A
3
10
B
7
15
C
10
20
D
17
25
E
6
30
F
14
35
G
4
40
H
15
45
K
2

Problem 11.3

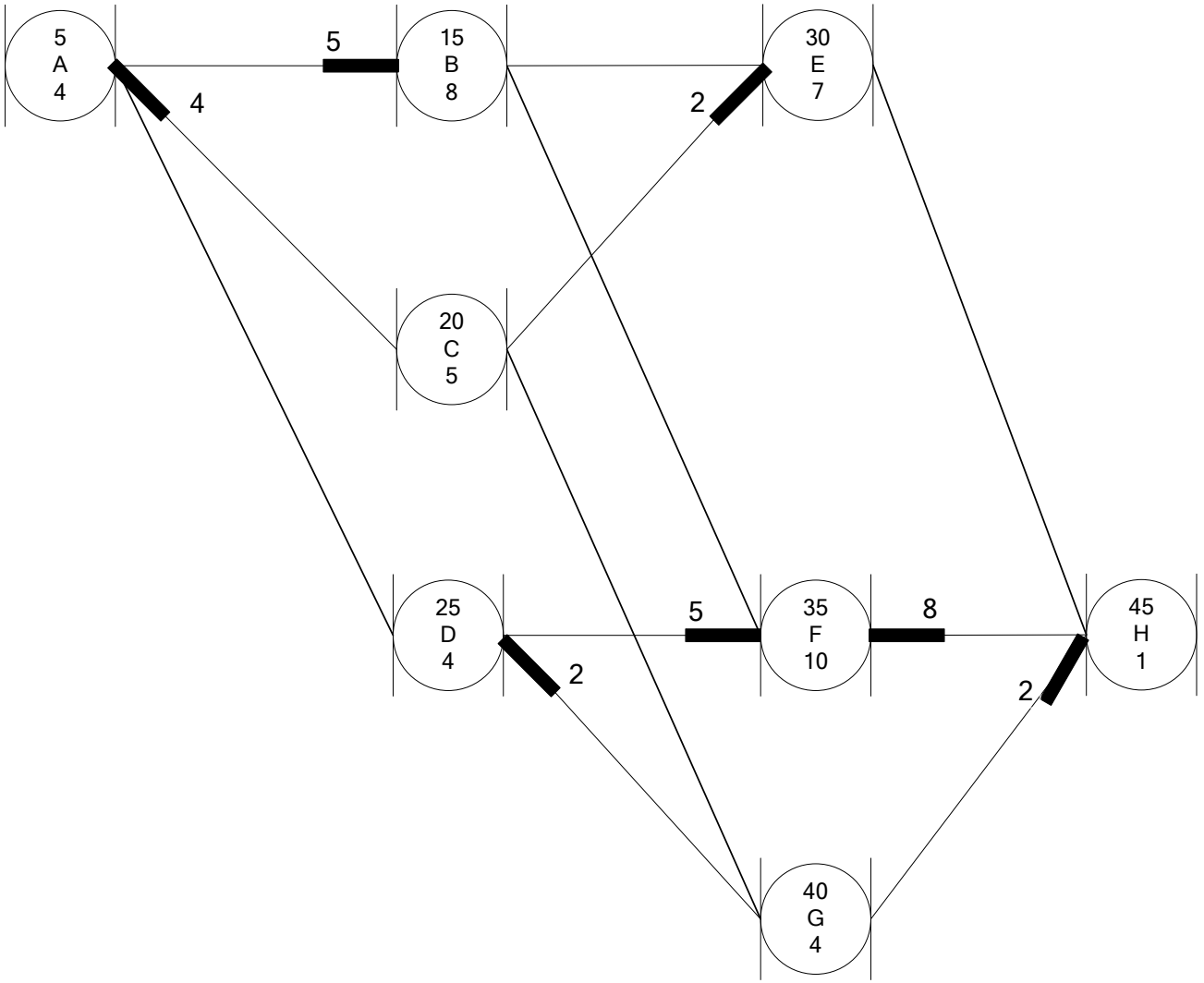

Solution 11.3

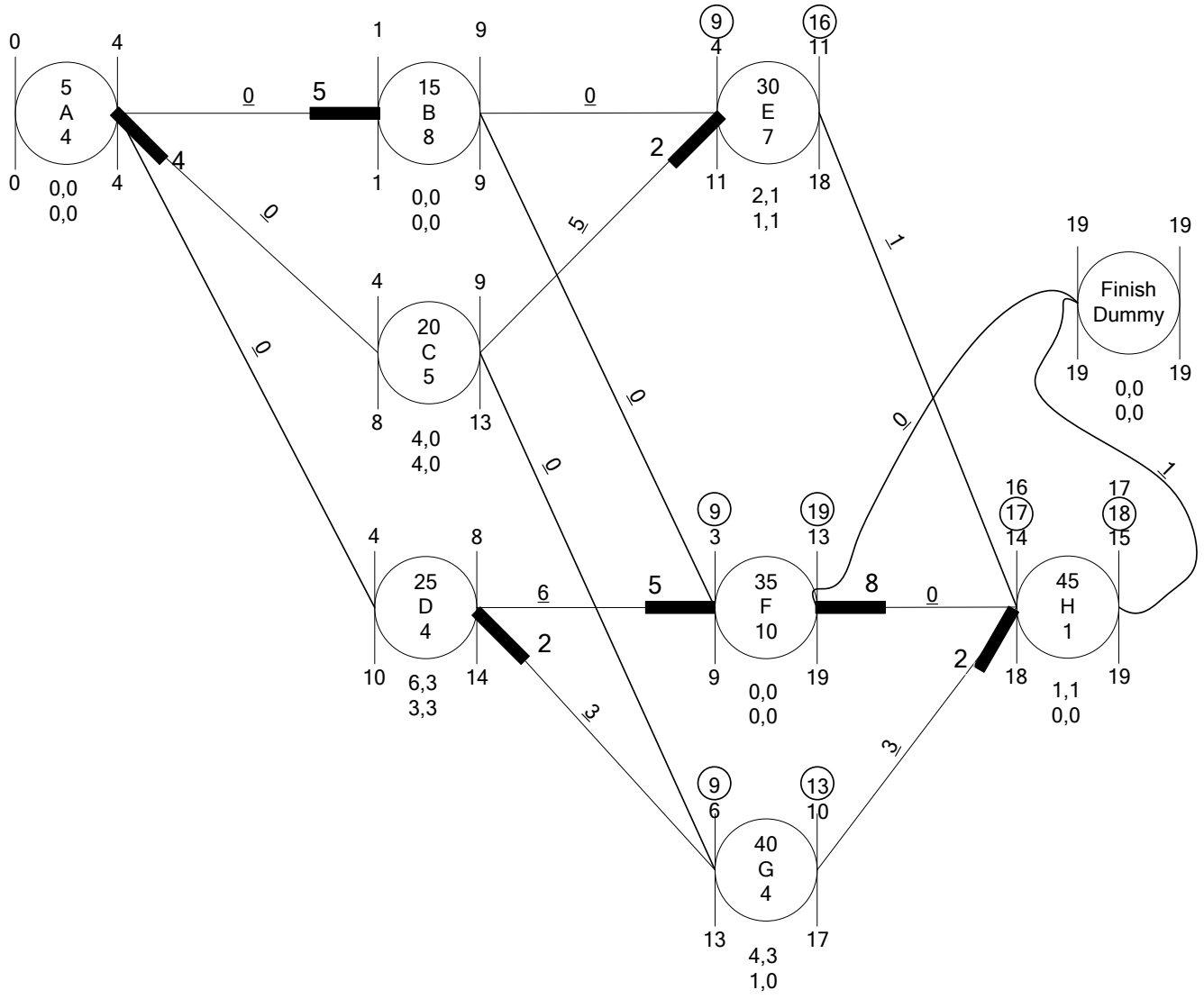

Problem 11.4

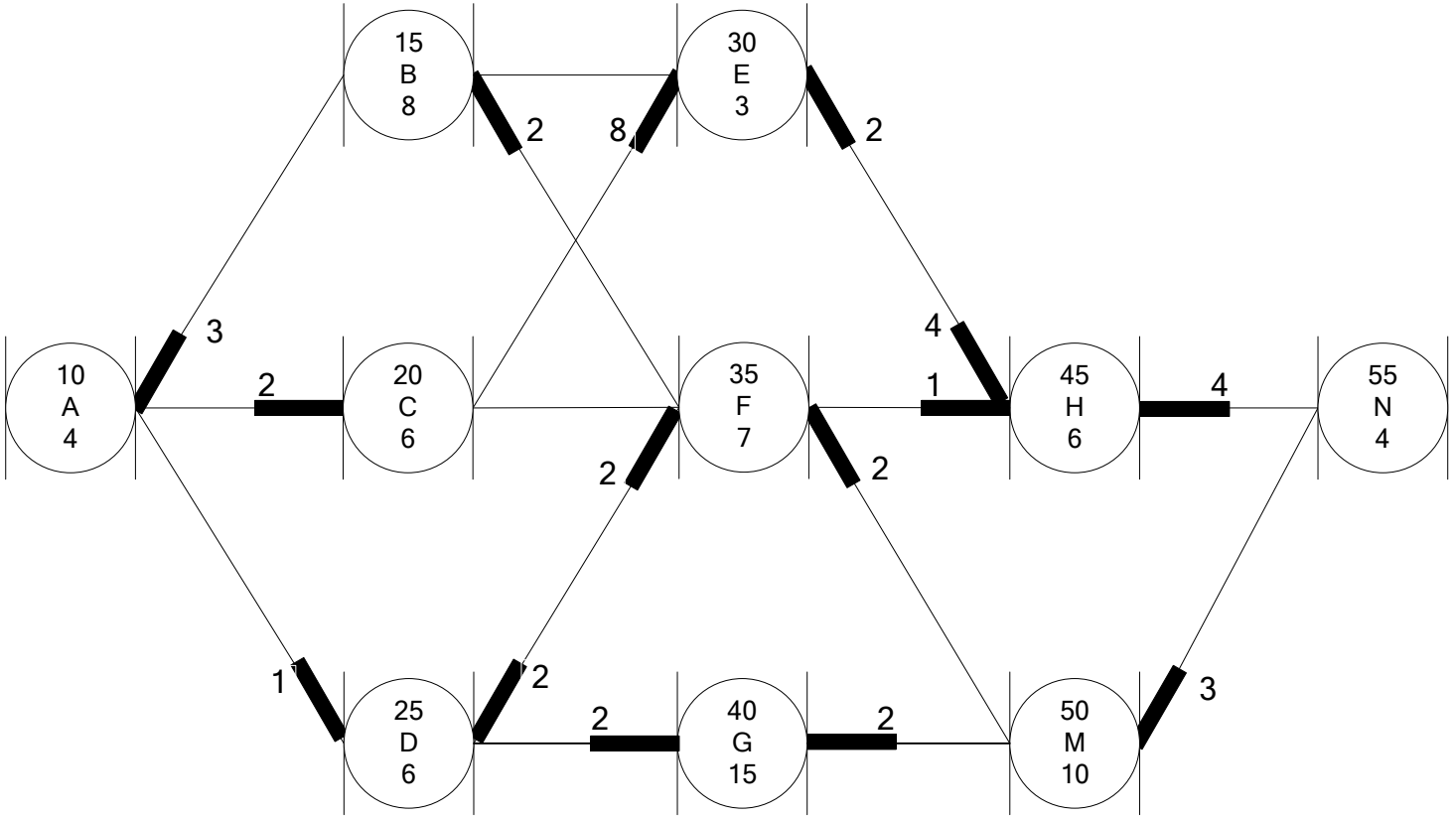
15
B
8
30
E
3
10
A
4
20
C
6
35
F
7
45
H
6
55
N
4
25
D
6
40
G
15
50
M
10
3
2
2
8
2
4
1
4
2
2
1
2
2
2
3

Solution 11.4

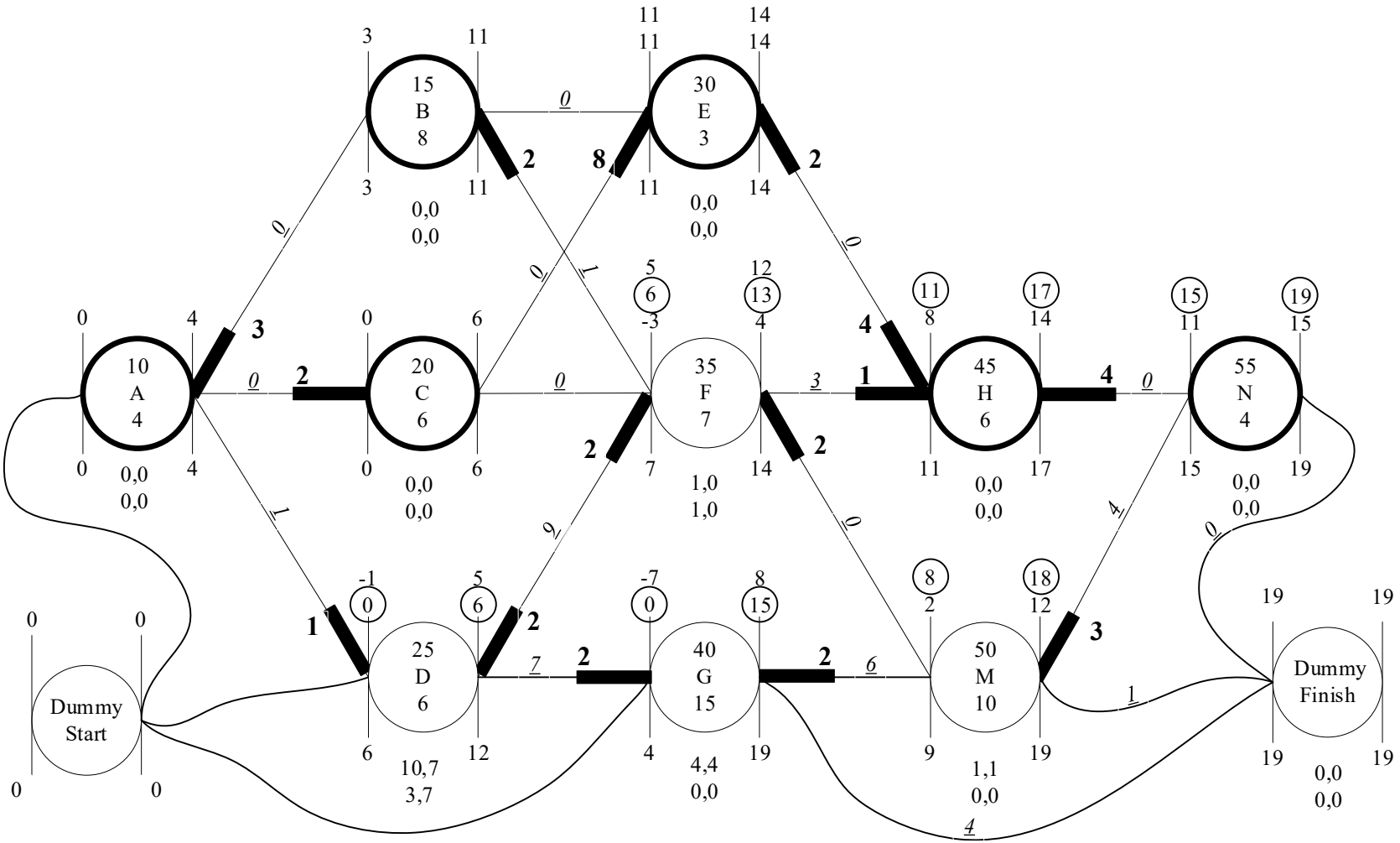

Problem 11.5

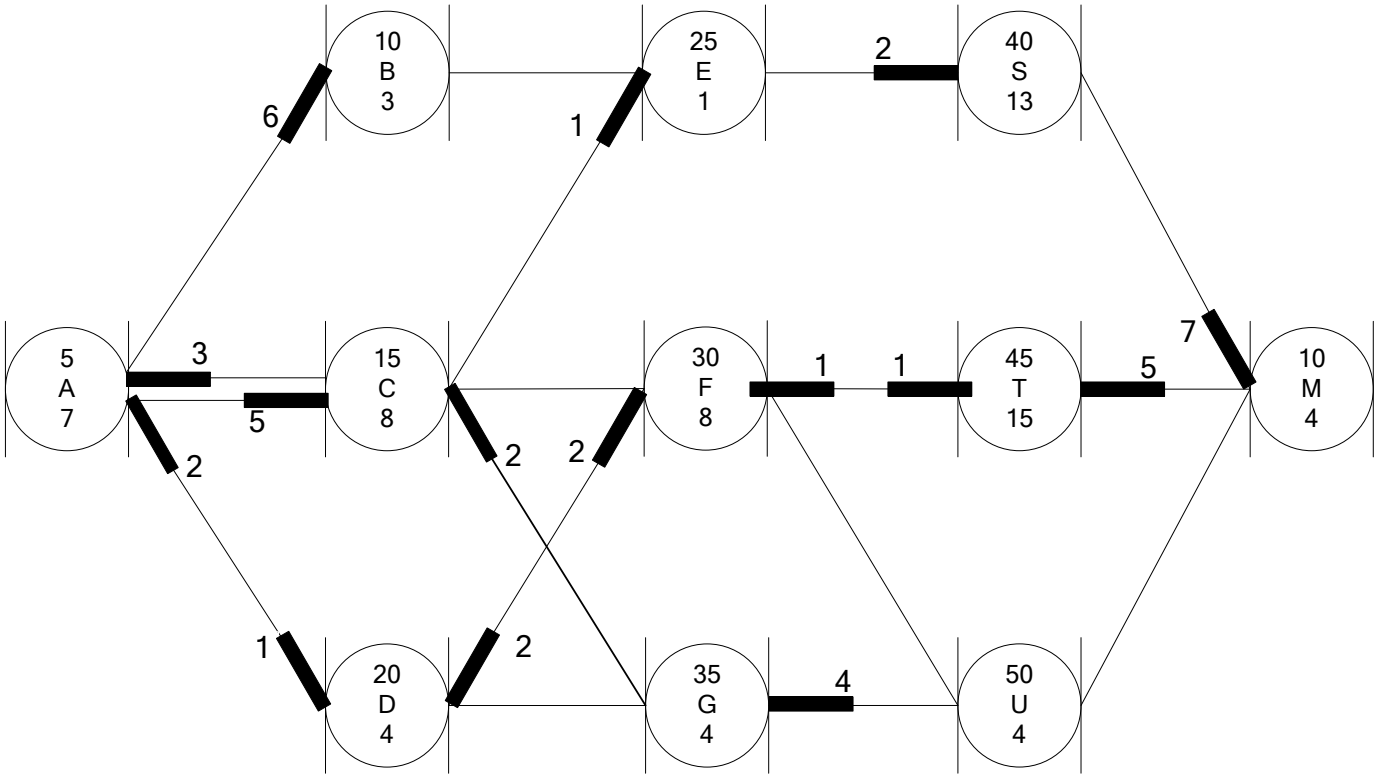
10
B
3
25
E
1
40
S
13
5
A
7
15
C
8
30
F
8
45
T
15
10
M
4
20
D
4
35
G
4
50
U
4
6
1
2
3
5
2
2
2
1
1
5
7
1
2
4

Solution 11.5

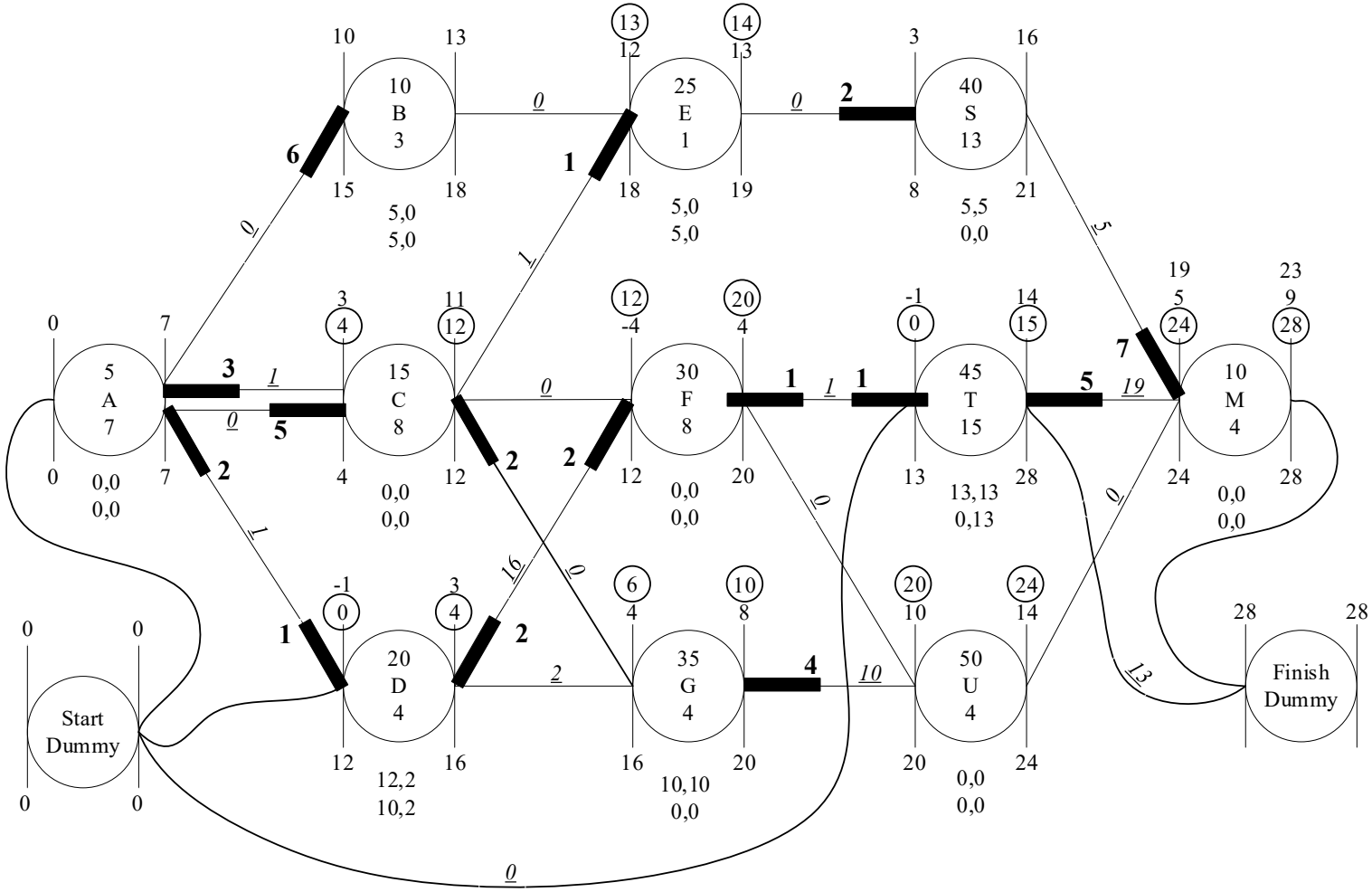

12.REPETITIVE SCHEDULING METHOD

REPETITIVE SCHEDULING METHOD (RSM)

Problem 12.1

This project consists of 5 units requiring 7 activities.
Construct RSM diagram of the following project
Determine critical activities
Identify controlling sequence
Identify resource critical activities

	Activity	Predecessors	Duration/Unit
1	A		2
2	B	A	1
3	C	B	3
4	D	C	2
5	E	D	1
6	F	E	2
7	G	F	1

Solution 12.1

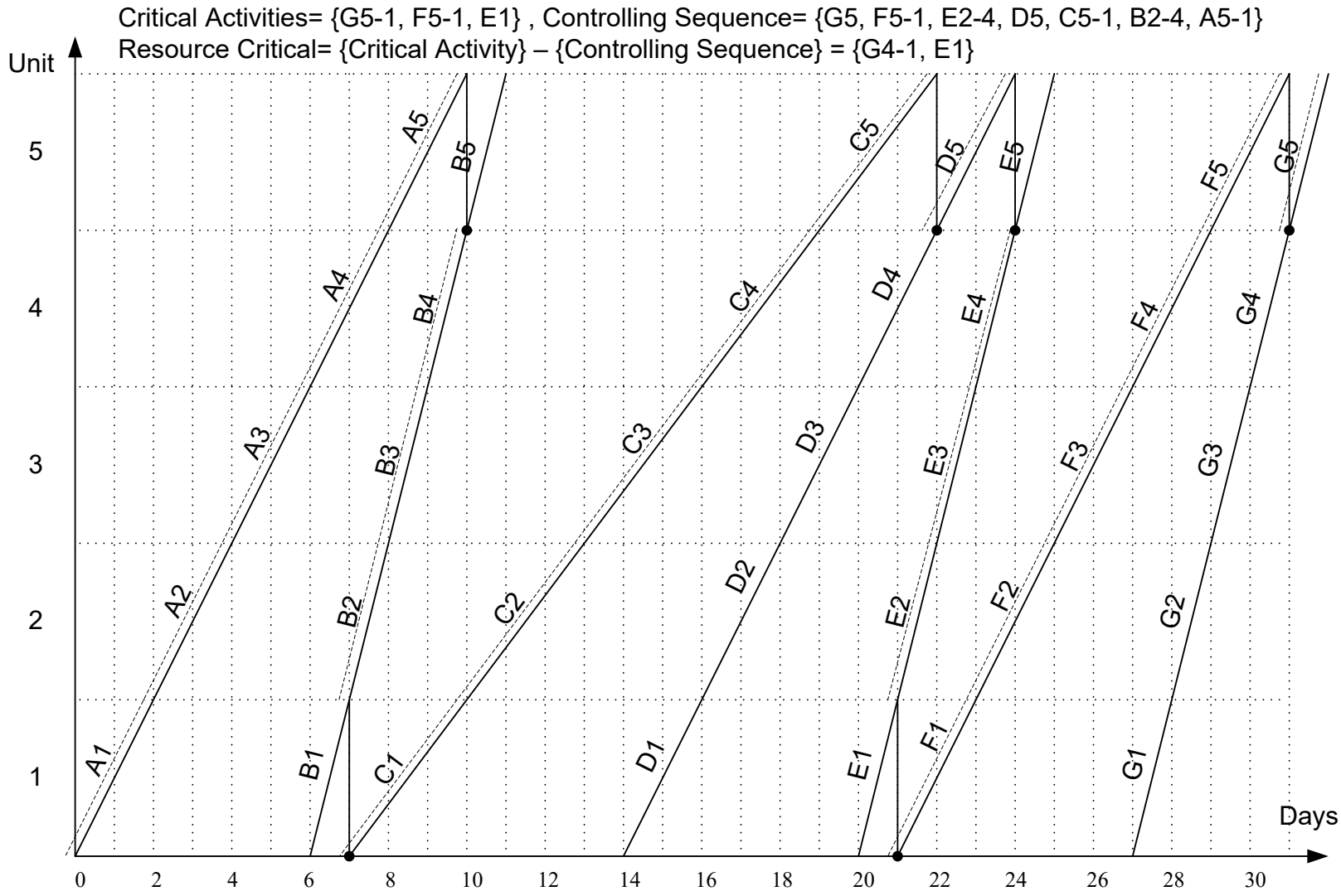

Problem 12.2

This project consists of 3 units requiring 7 activities.
Construct RSM diagram of the following project
Determine critical activities
Identify controlling sequence
Identify resource critical activities

	Activity	Predecessors	Duration/Unit
1	A		2
2	B	A	3
3	C	A	2
4	D	B, C	4
5	E	D	4.333
6	F	D	1
7	G	E, F	4

Solution 12.2

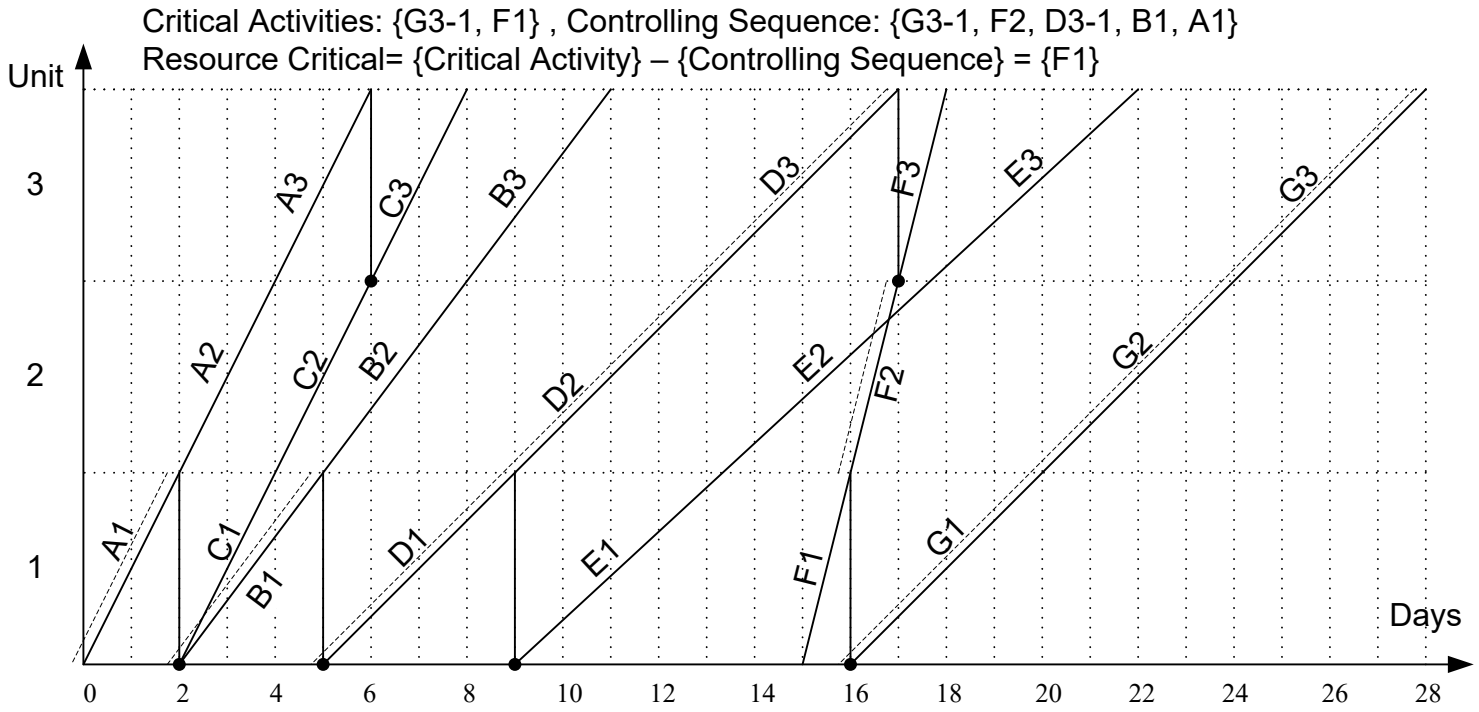

Problem 12.3

This project consists of 5 units requiring 7 activities.
Construct RSM diagram of the following project
Determine critical activities
Identify controlling sequence
Identify resource critical activities

	Activity	Predecessors	Duration/Unit
1	A		3
2	B	A	5
3	C	A	1
4	M	C	2
5	D	B	2
6	E	M, D	2
7	F	E	3

Solution 12.3

